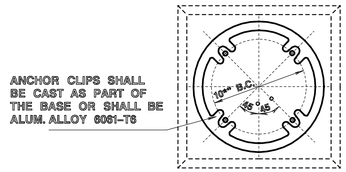

SECTION A–A

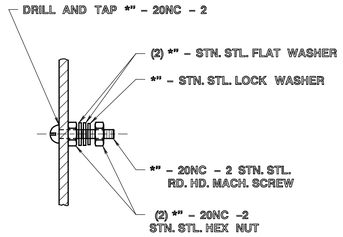

DETAIL "A"

GROUND STUD DETAIL

OPPOSITE DOOR OPENING

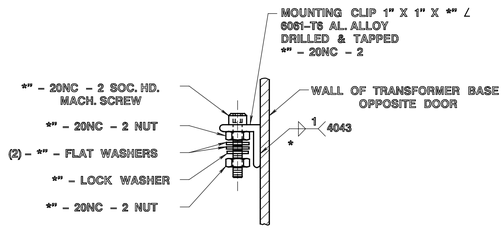

ALTERNATE DETAIL "B"

GROUND STUD DETAIL

OPPOSITE DOOR OPENING

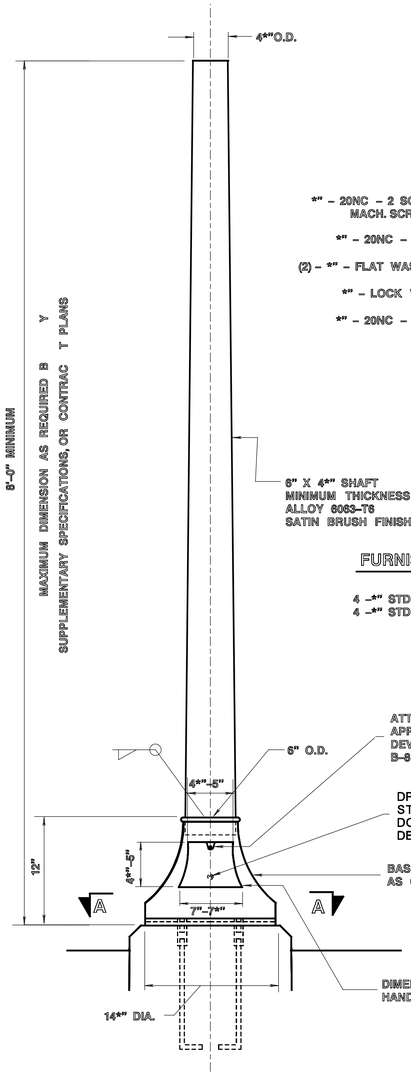

PEDESTRIAN SIGNAL STANDARD

FURNISH WITH EACH STANDARD

4 –*" STD. HEX. HEAD BOLT
4 –*" STD. PLAIN WASHER
} SEE ANCHOR BOLT DETAIL FOR TYPE

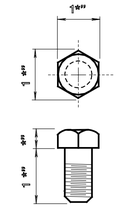

3/4" STD. HEX HD. BOLT

STAINLESS STEEL ASTM A–193 GRADE B8
U.S. STANDARD THREADS 10 PER INCH
4– REQ'D. PER PEDESTAL

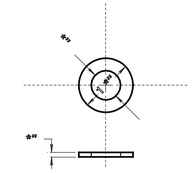

3/4" SAE STD. PLAIN WASHER

STAINLESS STEEL
4– REQ'D. PER PEDESTAL

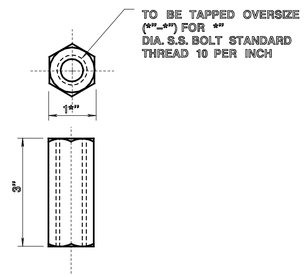

HEX STEEL ROD COUPLING

GALVANIZED PER ASTM A–153
*" U.S. STD.THREADS (SEE NOTE ABOVE)
1*" HEX STOCK 4–REQ'D.PER PEDESTAL

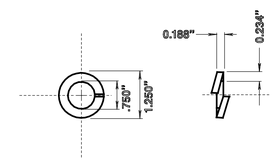

3/4" STD. LOCK WASHER

STAINLESS STEEL
4– REQ'D. PER PEDESTAL

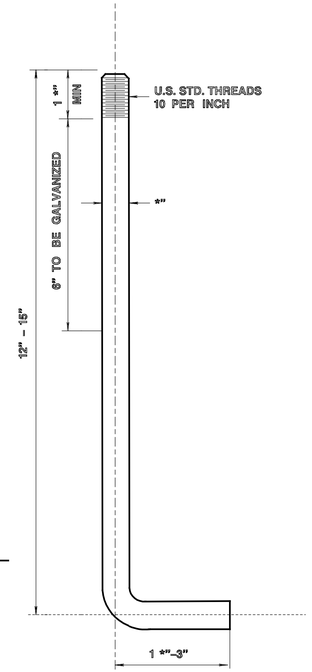

3/4" DIA. ANCHOR BOLT

STEEL PER ASTM A–576
4– REQ'D. PER PEDESTAL
TOP 6" SHALL BE GALVANIZED PER ASTM A–153

ANCHOR BOLT DETAIL

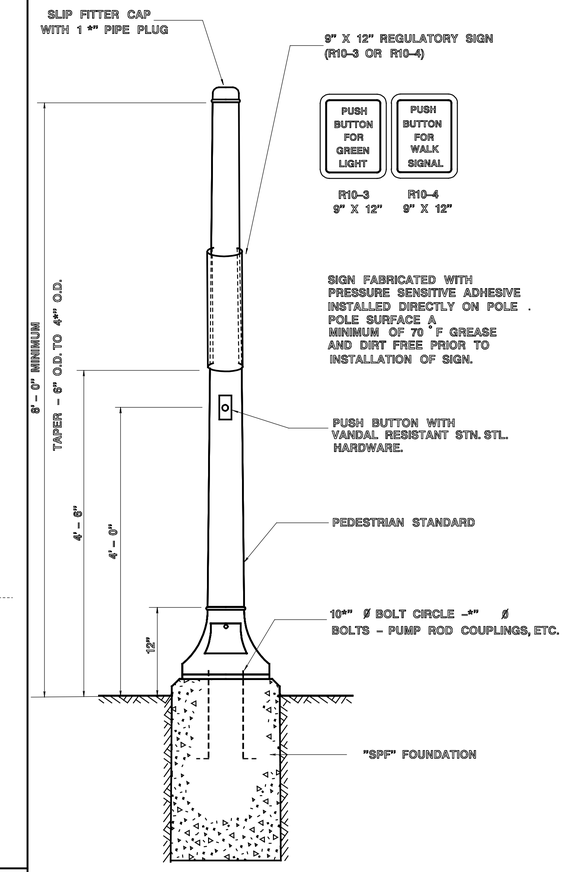

TYPICAL PEDESTRIAN SIGNAL STANDARD

PUSH BUTTON INSTALLED

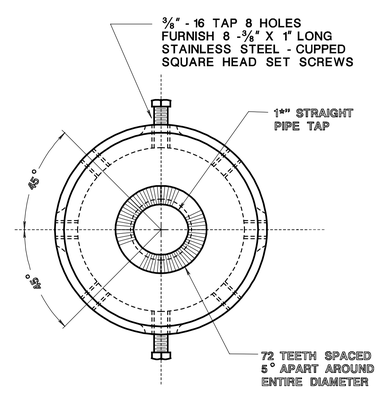

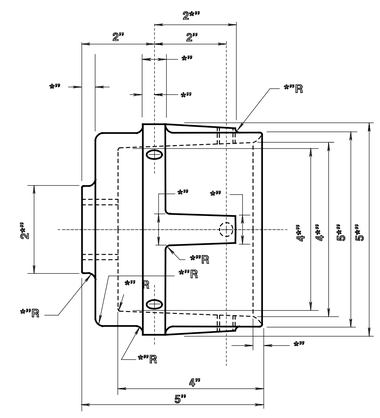

SLIP FITTER DETAIL

MATERIAL: ALUMINUM ALLOY 356

NOTES:

1. DESIGN AND MANUFACTURE ACCORDING TO THE 2001 AASHTO STANDARD SPECIFICATIONS FOR STRUCTURAL SUPPORTS FOR HIGHWAY SIGNS, LUMINAIRES AND TRAFFIC SIGNALS. UTILIZE APPENDIX C OF THE SPECIFICATIONS FOR IDENTIFICATION OF LOADING CRITERIA. DESIGN WIND SPEED IS 80 MPH. DESIGN FOR FATIGUE IS WAVED.
2. ALL TOLERANCES OF CASTINGS ± *".

NEW JERSEY DEPARTMENT OF TRANSPORTATION

ELECTRICAL DETAILS

N.T.S.

PEDESTRIAN SIGNAL STANDARD, SLIP FITTER, PUSH BUTTON & ANCHOR BOLT

T–0707

REFERENCE

BDC07D-03