FIXED LENGTH NON-ADJUSTABLE SWING SIGN BRACKET

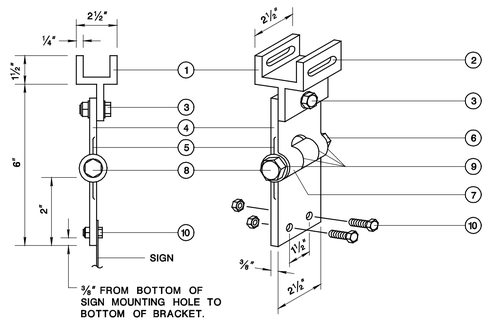

1. PIVOTAL UPPER BRACKET.
2. 1⅝" x ¼" SLOT FOR DOUBLE STRAPPING TO MAST ARM. (M2G-34S(HD) .030 x ¾" HEAVY DUTY STAINLESS STEEL STRAP WITH M2G-34B(HD) BUCKLE RECOMMENDED.)
3. ½" - 13 x 1½" STAINLESS STEEL HEX HEAD BOLT WITH STAINLESS STEEL HEX LOCK NUT AND 1/16" STAINLESS STEEL WASHER (BOTH SIDES). ALLOWS UPPER BRACKET TO PIVOT AND ALIGN WITH MAST ARM.
4. 6" OVERALL DROP WITH FIXED LENGTH SIGN BRACKET.
5. STAINLESS STEEL DAMPENER SPRING (REMOVABLE).
6. STAINLESS STEEL HEX LOCK NUT WITH 1/16" STAINLESS STEEL WASHER.
7. 1" O.D. AXLE HOUSING.
8. ½" - 13 x 4" STAINLESS STEEL HEX HEAD BOLT WITH 1/16" STAINLESS WASHER.
9. OILITE BUSHING.
10. SIGN MOUNTING SETS, CONSISTING OF TWO EACH 5/16" - 18 x 1" STAINLESS STEEL HEX HEAD BOLT WITH STAINLESS STEEL HEX LOCK NUT. TWO HOLES ON 1½" CENTERS PROVIDE POSITIVE LOCK SIGN MOUNTING TO BRACKET.

ADJUSTABLE LENGTH SWING SIGN BRACKET

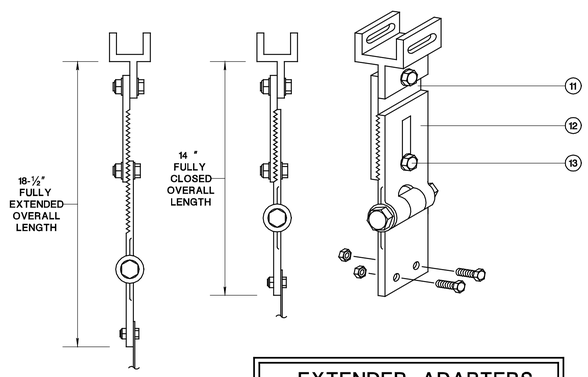

11. 8¼" OVERALL LENGTH UPPER ADJUSTABLE SIGN BRACKET SECTION.
12. 9" OVERALL LENGTH LOWER ADJUSTABLE SIGN BRACKET SECTION, INCLUDING AXLE HOUSING (8" OVERALL LENGTH TO TOP OF AXLE HOUSING).
13. ½" - 13 x 1½" STAINLESS STEEL HEX BOLT WITH STAINLESS STEEL HEX LOCK NUT AND 1/16" STAINLESS STEEL WASHERS (BOTH SIDES). LOOSEN LOCK NUT, ADJUST BRACKET TEETH TO LEVEL SIGN.

EXTENDER ADAPTERS

FOR ADJUSTABLE LENGTH SWING SIGN BRACKET. EXTENDS BRACKET TO LEVEL SIGN. FITS ANY DEGREE OF MAST ARM RISE.

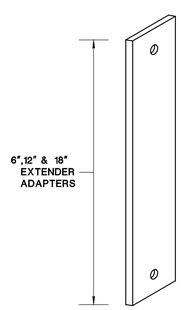

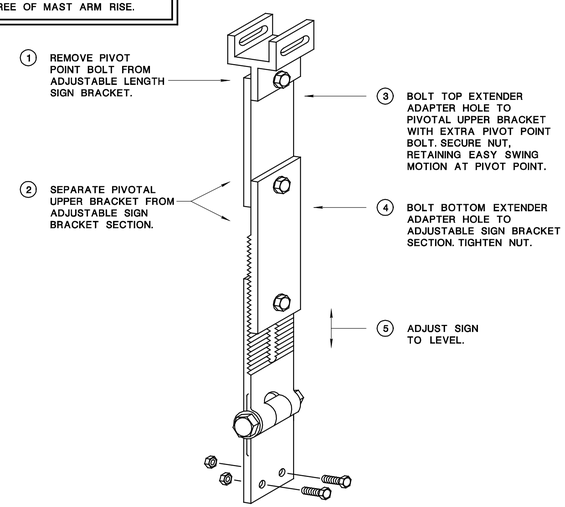

EXTENDER ADAPTERS ARE ALL ALUMINUM 6061T6 ALLOY. ⅜" THICK x 2½" WIDE BAR x VARIABLE LENGTH COMPLETE WITH ONE HOLE EACH END FOR ½" BOLT. EACH EXTENDER BAR INCLUDES ONE PIVOT POINT ½" - 13 x 1½" STAINLESS STEEL HEX HEAD BOLT WITH HEX LOCK NUT AND 2 WASHERS. (EXTENDER ADAPTERS ARE AVAILABLE IN VARIABLE LENGTHS ON REQUEST.)

MAST ARM ASSEMBLY BRACKET

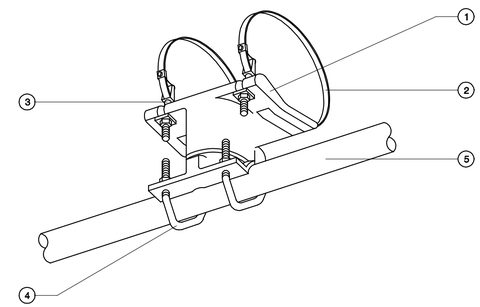

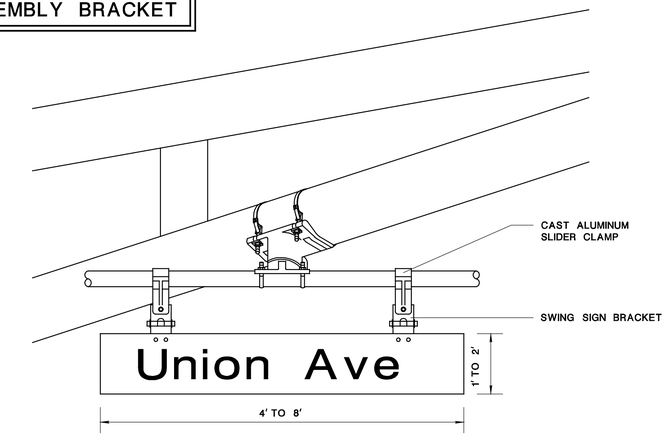

SLIDER CLAMP

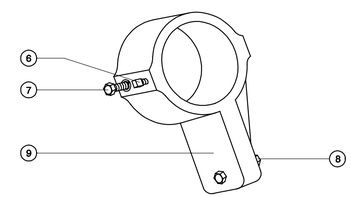

1. CLAMP SHALL BE ALUMINUM ALLOY (356-T6)
2. ⅝" STAINLESS STEEL STRAP (2) WITH ⅝" BANDCLAMP.
3. STAINLESS STEEL CLAMP SCREW WITH BEARING WASHER, 7/16" FLATWASHER & 7/16" - 14 HEX NUT. CLAMP SCREW SHALL BE INSTALLED WITH MAINTAINING A MINIMUM OF ¼" CLEARANCE TO THE MAST ARM CLAMP.
4. 5/16" - 18 x 1¾" x 2⅝" x ⅞" U-BOLT WITH 5/16" SPLIT LOCKWASHER & 5/16" - 18 HEX NUT.
5. 1½" ALUMINUM TUBE
6. ⅜" SQUARE HEAD SET SCREW
7. 5/16" x 1½" HEX BOLT WITH LOCKWASHER
8. ⅜" x 1½" STAINLESS STEEL HEX HEAD BOLT WITH STAINLESS STEEL HEX LOCK NUT AND 1/16" STAINLESS STEEL WASHER (BOTH SIDES). A BRONZE REDUCER BUSHING (½" TO ⅜") SHALL BE USED INSIDE THE SLIDER CLAMP.
9. CAST ALUMINUM SLIDER CLAMP

NOTE:

INSTALLATION OF SLIDER:
DRILL ⅜" HOLE THRU ONE WALL OF PIPE.
TIGHTEN 5/16" x 1½" HEX BOLT WITH LOCKWASHER INTO SLIDER THRU HOLE IN PIPE. ATTACH ⅜" SQUARE HEAD SET SCREW.

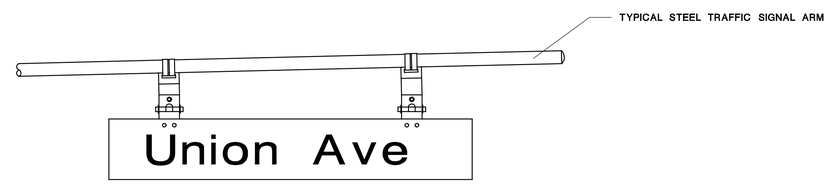

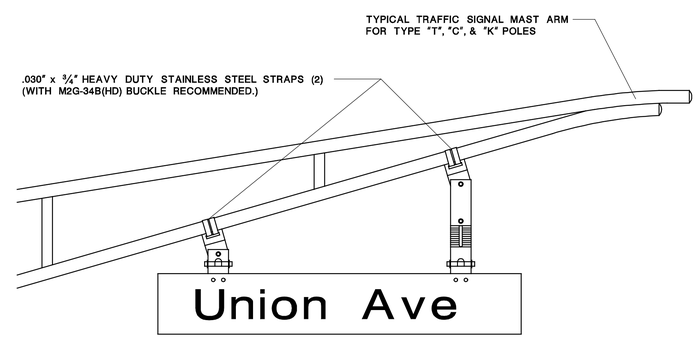

NEW JERSEY DEPARTMENT OF TRANSPORTATION

ELECTRICAL DETAILS

N.T.S.

OVERHEAD MAST ARM ADJUSTABLE SWING SIGN BRACKETS

T-4507

REFERENCE

BDC07D-03