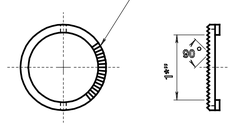

NOTE:

SERRATED POSITIONING RING TO BE PROVIDED WHEN TRAFFIC SIGNAL IS DIRECTLY ATTACHED TO WIRE OUTLET FITTING.

DETAIL OF HEAD POSITIONING RING

MATERIAL: DELRIN

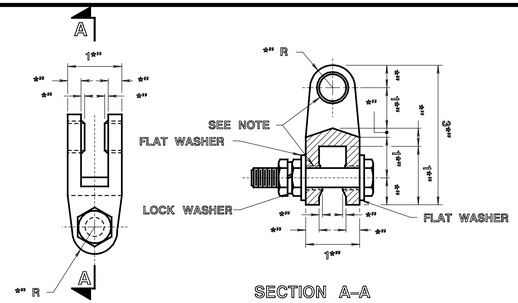

SECTION A–A

UNIVERSAL JOINT

MATERIAL – BRONZE, 85–5–5–5

NOTE:

DRILL CASTING FOR C304 STN. STL. *" THK. WALL BUSHINGS, FURNISH & PRESS FIT INTO CASTING.

FURNISH WITH EACH UNIVERSAL JOINT:

(1) *" – 11 NC X 3" L.G. STN. STL. HEX BOLT
(2) *" – 11 NC STN. STL. HEX NUTS
(2) *" Ø STN. STL. FLAT WASHER
(1) *" Ø STN. STL. LOCK WASHER

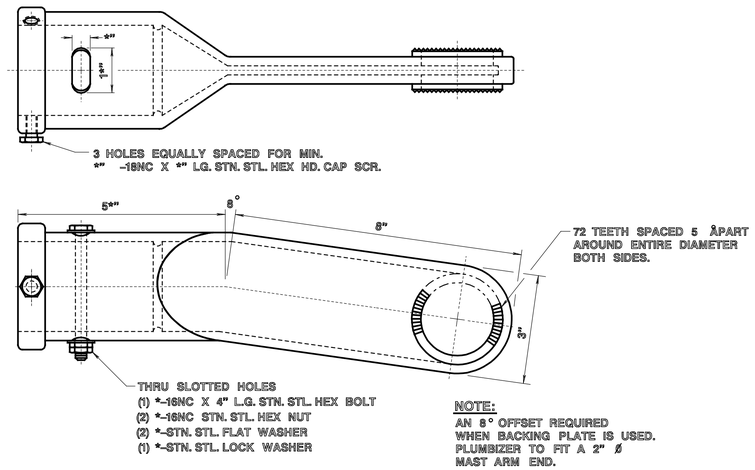

NOTE:

AN 8° OFFSET REQUIRED WHEN BACKING PLATE IS USED. PLUMBIZER TO FIT A 2" Ø MAST ARM END.

ELEVATOR PLUMBIZER

MATERIAL – ALUMINUM ALLOY 356

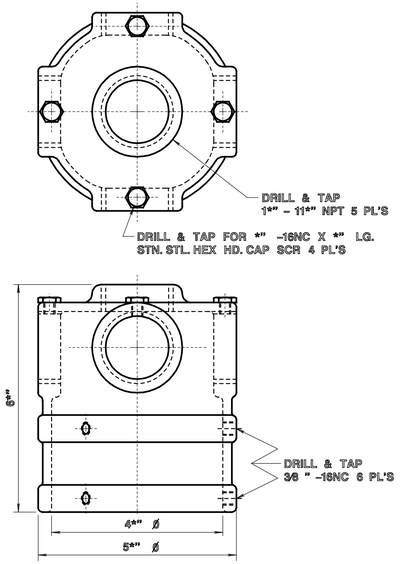

POST TOP ADAPTER

MATERIAL–ALUMINUM ALLOY 356
(FOR OPTICALLY PROGRAMMED INDICATIONS ONLY)

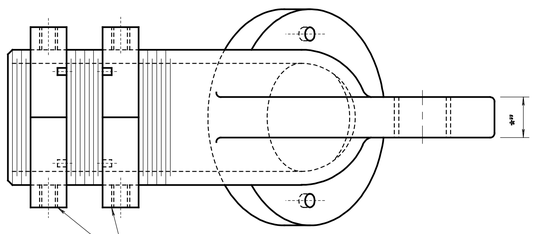

HEX LOCK NUTS – BRONZE FURNISH (2) WITH EACH OUTLET NUTS TO BE PROVIDED WITH *" DP X*" WIDE SLOT FOR SERRATED RING; DRILL & TAP *" – 20 FOR (2) STN. STL. SOC. HD. SET SCR, ONE EACH SIDE.

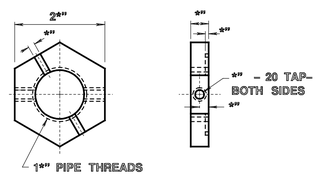

HEX LOCK NUT

MATERIAL: BRONZE, 85–5–5–5

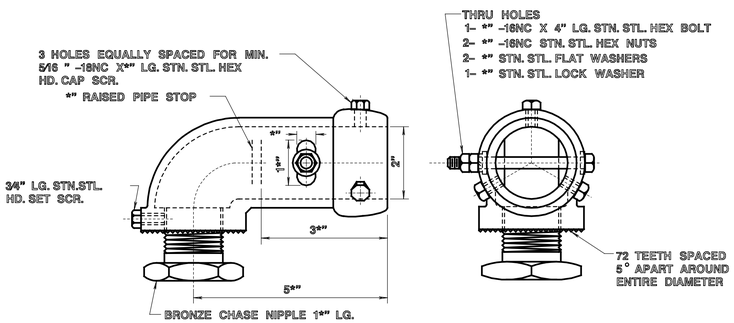

MAST ARM SLIP FITTER

MATERIAL – BRONZE, 85–5–5–5

NOTES:

1. THE SLIP FITTER SHALL BE UTILIZED IN MOUNTING OPTICALLY PROGRAMMED TRAFFIC SIGNALS
2. WHEN USED FOR MOUNTING SIGNALS BACK TO BACK DRILL THRU NIPPLE AND USE A 1" LG. CAP SCREW.
3. SLIP FITTER TO FIT A 2" Ø MAST ARM END.

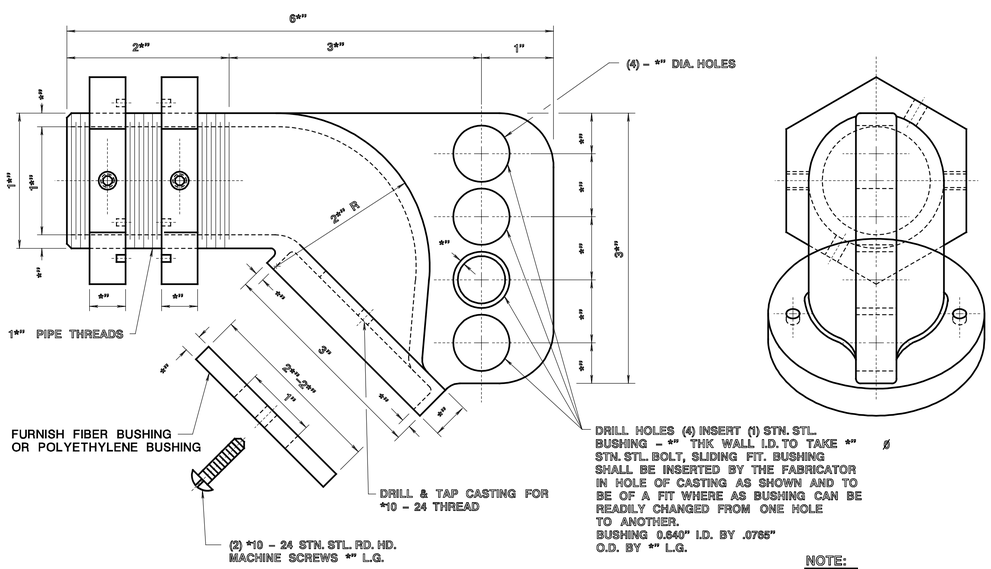

WIRE OUTLET

MATERIAL: BRONZE, 85–5–5–5

NOTE:

ON INSTALLATION PLACE THEBUSHING IN THE APPROPRIATE MOUNTING HOLE AS REQUIRED TO OBTAIN VERTICAL POSITIONING AND MAXIMUM VISIBILITY OF THE SIGNAL ASSEMBLY TO THE APPROACH ROADWAY AND AS DIRECTED BY THE ENGINEER.

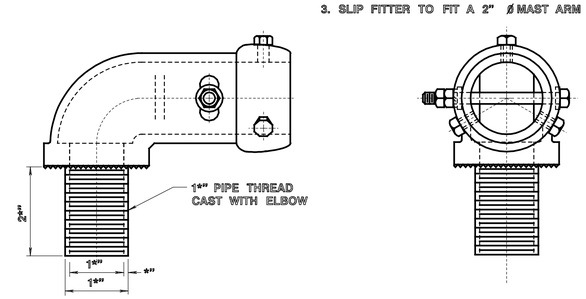

ALTERNATE MAST ARM SLIP FITTER

SAME AS ABOVE EXCEPT WHERE NOTED

NOTES:

1. ALL TOLERANCES OF CASTINGS * *".
2. ALL STINALESS STEEL BOLTS ON THIS SHEET PER ASTM A193, GRADE B8.

NEW JERSEY DEPARTMENT OF TRANSPORTATION

ELECTRICAL DETAILS

N.T.S.

UNIVERSAL JOINT, WIRE OUTLET , MAST ARM SLIP FITTER, POST TOP ADAPTER AND ELEVATOR PLUMBIZER

T–0407

REFERENCE

BDC07D-03