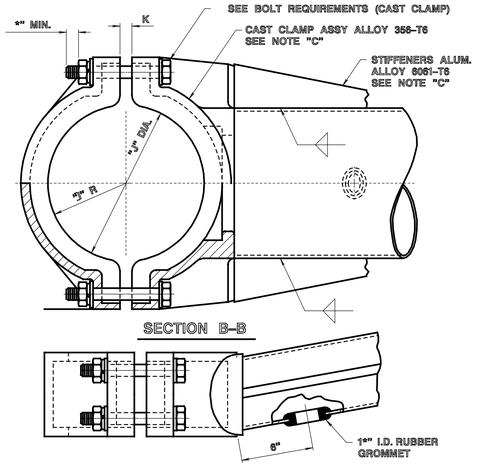

SECTION B–B

BOTTOM CLAMP DETAIL

ALUM. ALLOY 356–T6
MIN. DRAFT WHERE REQUIRED

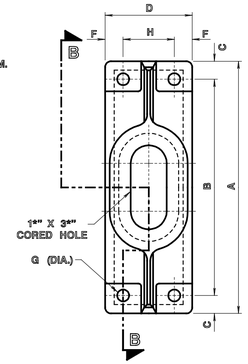

CAST CLAMP

BOLT REQUIREMENTS

8 – *" ø STN. STL. HEX HD. BOLTS,
ASTM A193, GRADE B8
16 – *" ø STN. STL. FLAT WASHERS
8 – *" ø STN. STL. LOCK WASHERS
8 – *" ø STN. STL. HEX NUTS

NOTE
15', 20', & 25' MAST ARMS
MIN. 5" X .125 WALL TUBE
ELLIPSIZED TO APPROX.
3" X 6*" SECTION

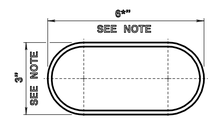

SECTION A–A

(TYPICAL BOTH MEMBERS)

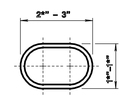

SECTION C–C

(TYPICAL ALL STRUTS)

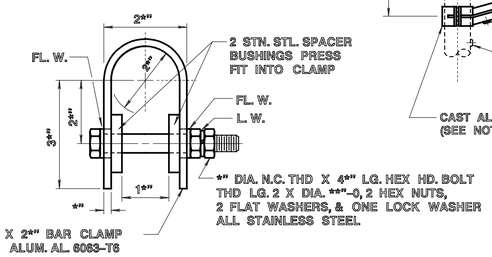

MOUNTING STRAP DETAIL

(FOR ALTERNATE MOUNTING STRAP
SEE DETAIL ON THIS SHEET)

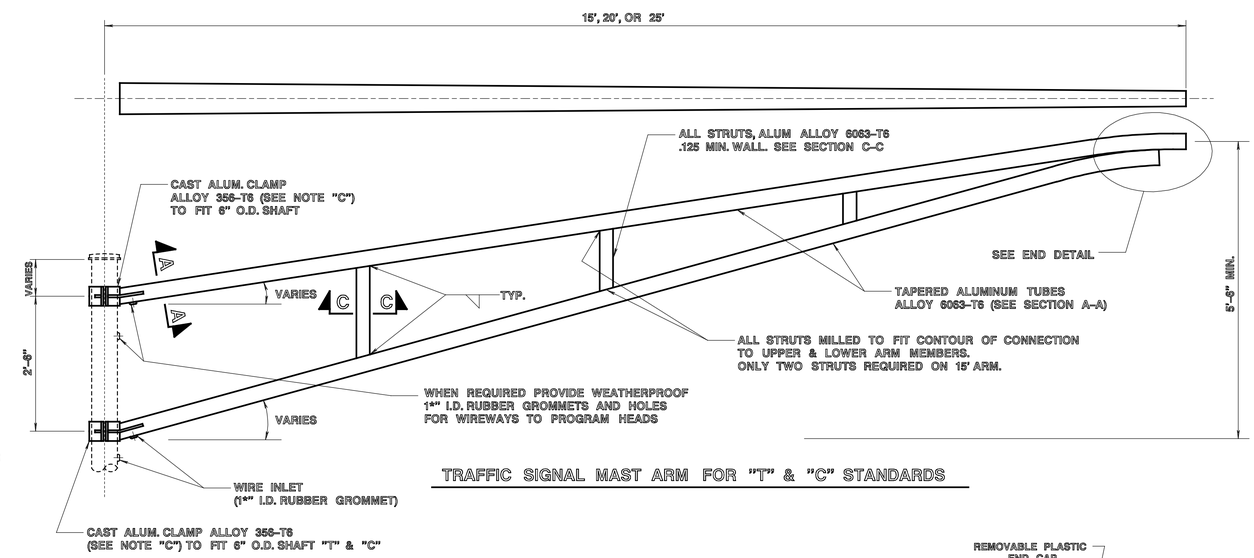

TRAFFIC SIGNAL MAST ARM FOR "T" & "C" STANDARDS

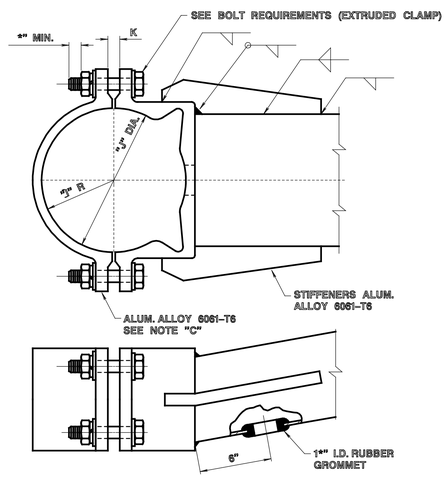

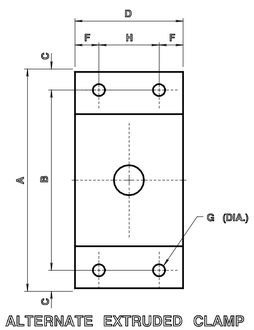

ALTERNATE EXTRUDED CLAMP

BOLT REQUIREMENTS

8 – *" ø STN. STL. HEX HD. BOLTS,
ASTM A193, GRADE B8
16 – *" ø STN. STL. FLAT WASHERS
8 – *" ø STN. STL. LOCK WASHERS
8 – *" ø STN. STL. HEX NUTS

DIMENSION CHART – CAST & EXTRUDED CLAMP											
LETTER	A	B	C	D	E	F	G	H	J	J	K
MIN. "	9*	7*	*	4*	–	*	*	2*	3	6*	*
MAX. "	10*	8*	*	5	–	1*	*	3	3*	6*	*

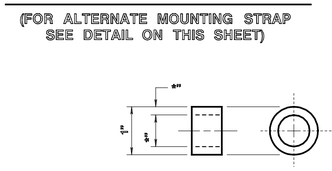

STN. STL. BUSHING FOR
ALTERNATE MOUNTING STRAP

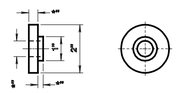

STAINLESS STEEL

SPACER BUSHING

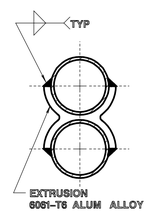

SECTION D–D

2*" X *" X 6" ALUM. STIFFENER OR
EXTRUSION ALLOY 6061–T6 OR 6063–T6
SEE SECTION D–D

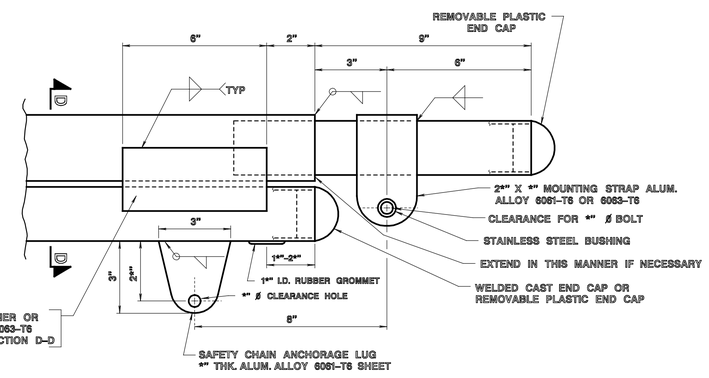

END DETAIL

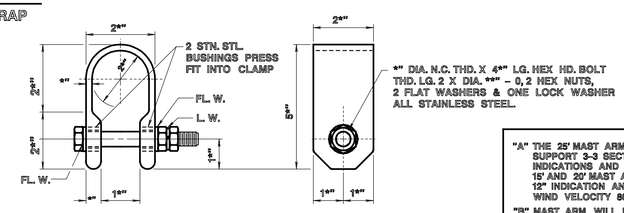

ALTERNATE MOUNTING STRAP

NOTES

"A" THE 25' MAST ARM SHALL BE DESIGNED TO ADEQUATELY SUPPORT 3–3 SECTION 8" OR 2–3 SECTION 12" TRAFFIC INDICATIONS AND ASSOCIATED MOUNTING HARDWARE. THE 15' AND 20' MAST ARMS SHALL SUPPORT 4–3 SECTION 12" INDICATION AND ASSOCIATED MOUNTING HARDWARE. WIND VELOCITY 80 M.P.H.– GUST FACTOR 1.3

"B" MAST ARM WILL BE INSTALLED ON NEW JERSEY DEPARTMENT OF TRANSPORTATION STANDARD ALUMINUM TRAFFIC SIGNAL POLE CONFORMING TO DRAWING NO. T–01 WITH TRANSFORMER BASE DRAWING NO. T–02.

"C" AN EXTRUDED CLAMP MAY BE SUPPLIED AS AN ALTERNATE TO THE CAST BAND INDICATED. GENERAL CONFIGURATION MUST BE SIMILAR AND STIFFENERS MUST BE INSTALLED AS INDICATED. CLAMP MUST FIT A 6" POLE AND BOLT ARRANGEMENT MUST BE IDENTICAL. STRENGTH OF ASSEMBLED ARM MUST EQUAL OR EXCEED CAST CLAMP CONSTRUCTION. EXTRUSION ALLOY 6061–T6.

"D" DESIGN AND MANUFACTURE ACCORDING TO THE 2001 AASHTO STANDARD SPECIFICATIONS FOR STRUCTURAL SUPPORTS FOR HIGHWAY SIGNS, LUMINAIRES AND TRAFFIC SIGNALS. UTILIZE APPENDIX C OF THE SPECIFICATIONS FOR IDENTIFICATION OF LOADING CRITERIA. DESIGN WIND SPEED IS 80 MPH. DESIGN FOR FATIGUE IS WAVED.

"E" ALL STAINLESS STEEL BOLTS SHALL CONFORM TO ASTM A193 GRADE B8.

"F" ALL TOLERANCES OF CASTINGS *".

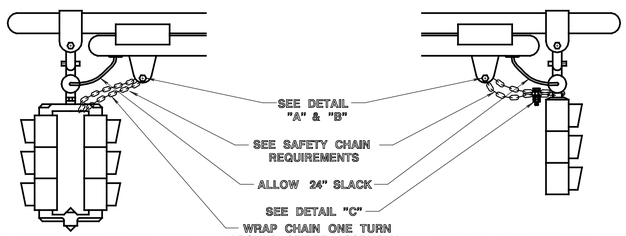

TYPICAL INSTALLATION FOR TWO
OR MORE TRAFFIC SIGNALS

TYPICAL INSTALLATION FOR ONE
POLYCARBONATE TRAFFIC SIGNAL

TYPICAL SAFETY CHAIN INSTALLATIONS

NOTE:
SAFETY CHAIN REQUIRED TO BE FURNISHED & INSTALLED
ON ALL CONTRACT INSTALLATIONS BY THE CONTRACTOR

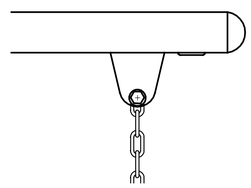

DETAIL "A"

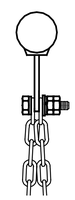

DETAIL "B"

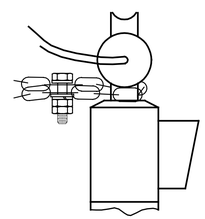

DETAIL "C"

SAFETY CHAIN REQUIREMENTS FOR
TWO OR MORE TRAFFIC SIGNALS

FURNISH:

42" OF *" HOT DIPPED GALVANIZED
COILPROOF STRAIGHT LINK CHAIN
1 – **" ø X 2" LG. STAINLESS STEEL
HEX HEAD BOLT FULLY THREADED
2 – *" øSTAINLESS STEEL HEX NUTS
2 – *" øSTAINLESS STEEL FLAT WASHERS
1 – **" ø STAINLESS STEEL LOCK WASHER

SAFETY CHAIN REQUIREMENTS FOR
ONE TRAFFIC SIGNAL

FURNISH:

42" OF *" HOT DIPPED GALVANIZED
COILPROOF STRAIGHT LINK CHAIN
2 – *" ø 2" LG. STAINLESS STEEL
HEX HEAD BOLT FULLY THREADED
4 – *" øSTAINLESS STEEL HEX NUTS
4 – *" øSTAINLESS STEEL FLAT WASHERS
2 – *" øSTAINLESS STEEL LOCK WASHER

NEW JERSEY DEPARTMENT OF TRANSPORTATION

ELECTRICAL DETAILS

N.T.S.

TRAFFIC SIGNAL MAST ARM ALUMINUM 15', 20' & 25' WITH
CLAMP DETAILS FOR "T" & "C" STANDARDS, &
SAFETY CHAIN INSTALLATION

T–0307

REFERENCE

BDC07D-03