TABLE I						
SIGN SUPPORT NUMBER	GO SIGN NUMBER	NUMBER OF FIXTURES	DIMENSIONS			
			SPACE "A"	SPACE "B"	SIZE OF SIGN	
					WIDTH	HEIGHT

PHOTOMETRIC DATA TABLE II ILLUMINATION REQUIREMENTS					
MIN. INITIAL AVG. FOOT CANDLES	MAX. FOOT CANDLES	MIN. FOOT CANDLES	UNIFORMITY RATIO MAX.–MIN.	SIZE OF SIGN	
				WIDTH	HEIGHT

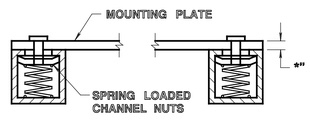

DETAIL "A"

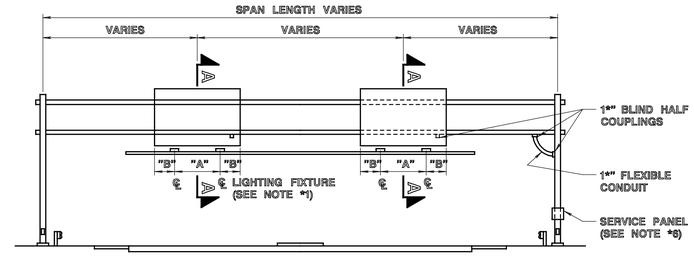

TYPICAL FULL ROADWAY SPAN STRUCTURE

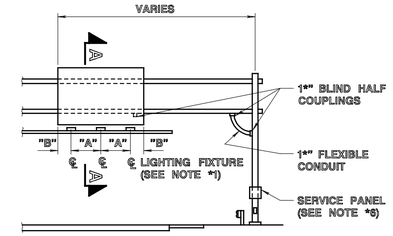

TYPICAL CANTILEVER OR HALF ROADWAY SPAN STRUCTURE

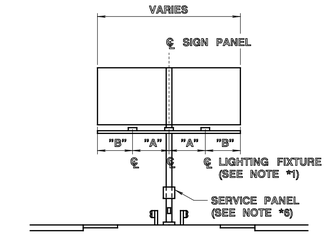

TYPICAL BUTTERFLY STRUCTURE

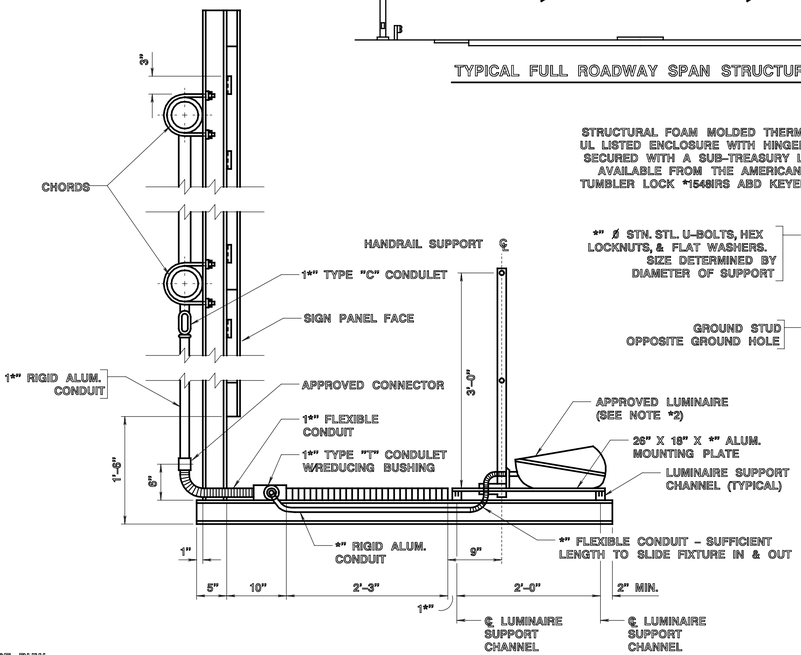

TYPICAL MAINTENANCE WALKWAY DETAILS

SECTION A–A

(REFER TO "MAINTENANCE WALKWAY" PLATE NO. 3.9–9)

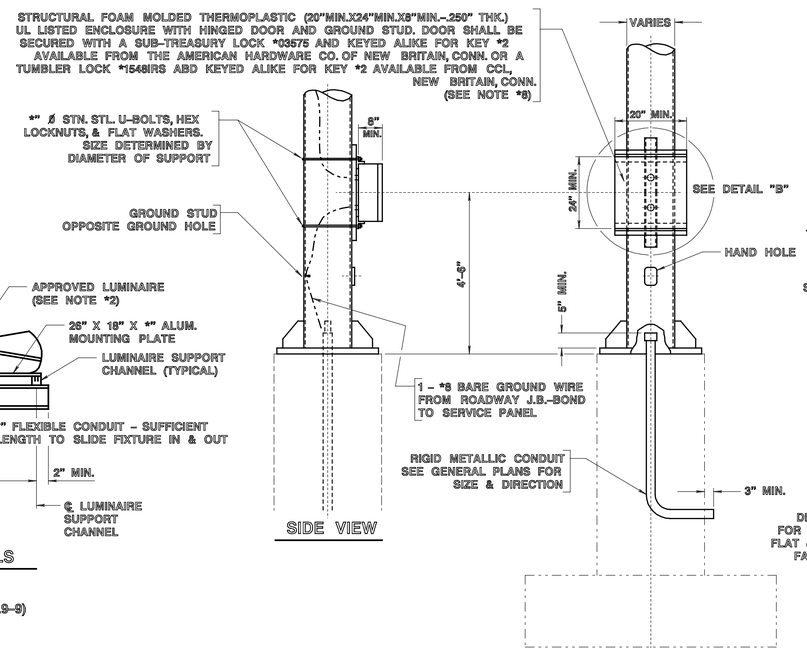

SIDE VIEW

ELEVATION – SERVICE PANEL AT SIGN STRUCTURE

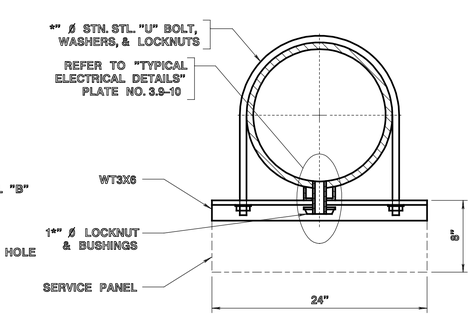

SECTION B–B

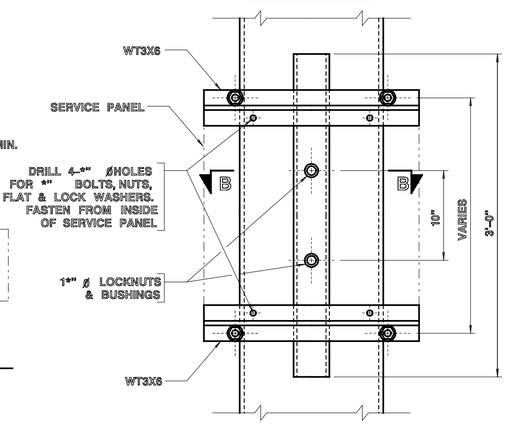

DETAIL "B"

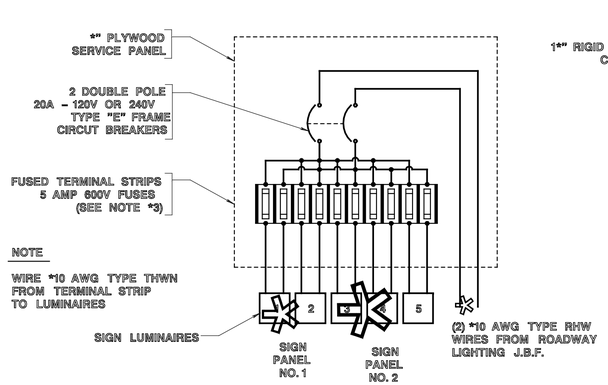

TYPICAL WIRING DIAGRAM FOR CIRCUITS WITHOUT NEUTRAL WIRE

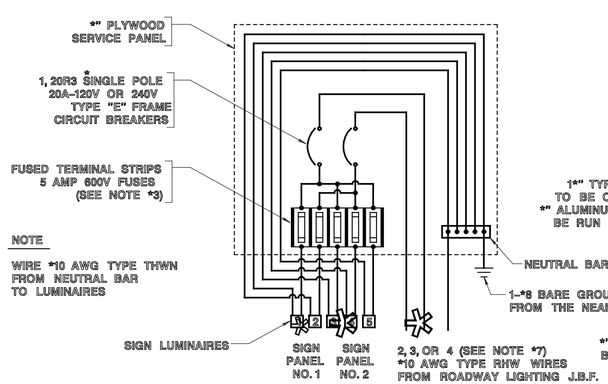

TYPICAL WIRING DIAGRAM FOR CIRCUITS WITH NEUTRAL WIRE

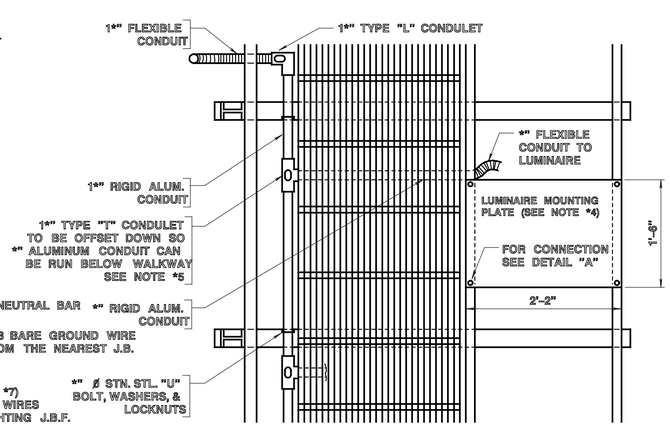

WALKWAY LIGHTING PLAN

NOTES:

1. LIGHTING FIXTURE DIMENSIONS "A" & "B" SHALL BE AS SHOWN ON TABLE I.
2. PHOTOMETRIC REQUIREMENTS: 250 WATT MERCURY VAPOR SIGN LIGHTING LUMINAIRE, H37–5KCØX, MOUNTED ONE FOOT BELOW BOTTOM EDGE AND FOUR AND ONE HALF FEET IN FRONT OF SIGN BOARD. THE PHOTOMETRIC DATA SHALL BE CALCULATED, FOLLOWING THE AASHTO STANDARDS FOR ROADWAY SIGN LIGHTING FOR VARIOUS SIZE SIGNS AND RECORDED IN THE PHOTOMETRIC DATA TABLE II.
3. TERMINAL STRIP SHALL BE THE TYPE WHICH ACCEPTS *" X 1*" FERRULE TYPE CARTRIDGE FUSES.
4. LUMINAIRE MOUNTING PLATES ARE PART OF THE LUMP SUM ELECTRICAL ITEM, "SIGN LIGHTING ASSEMBLY", AND SHALL BE PAID FOR AS SAME. MOUNTING PLATES MUST BE FIELD DRILLED TO CONFORM TO MOUNTING BOLT CIRCLES OF LUMINAIRES.
5. ALTERNATE CONDUIT ARRANGEMENT MAY BE SUBMITTED FOR APPROVAL TO THE ENGINEER.
6. REFER TO GENERAL PLANS FOR LOCATION AND DIRECTION OF SERVICE PANELS.
7. AS REQUIRED
8. GROOVE PROVIDING A WATER RESISTANT AND DUST–TIGHT ENCLOSURE.

THIS SHEET REQUIRES THAT DESIGN SPECIFIC INFORMATION BE ADDED. IT THEREFORE WILL ALWAYS BE SUPERSEDED IN THE CONSTRUCTION PLANS.

NEW JERSEY DEPARTMENT OF TRANSPORTATION

ELECTRICAL DETAILS

N.T.S.

SIGN LIGHTING FOR "GO" SIGNS

L–1007

REFERENCE

BDC073-03