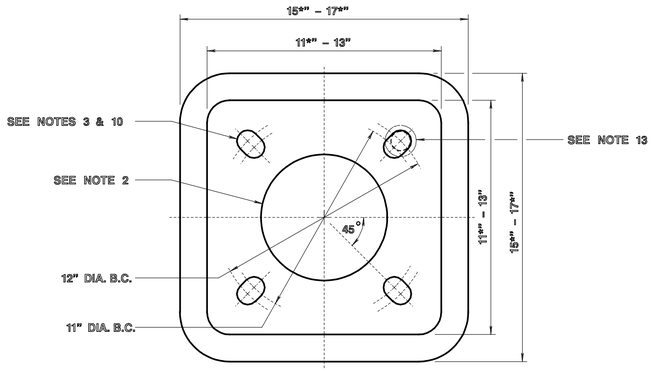

TOP VIEW

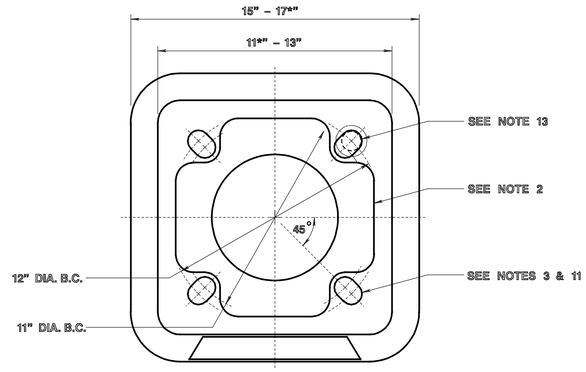

TOP VIEW

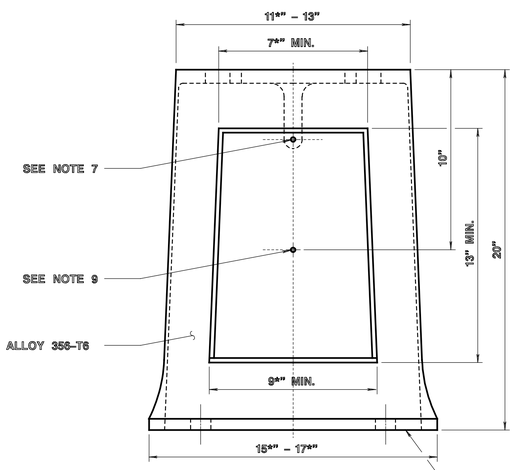

ELEVATION

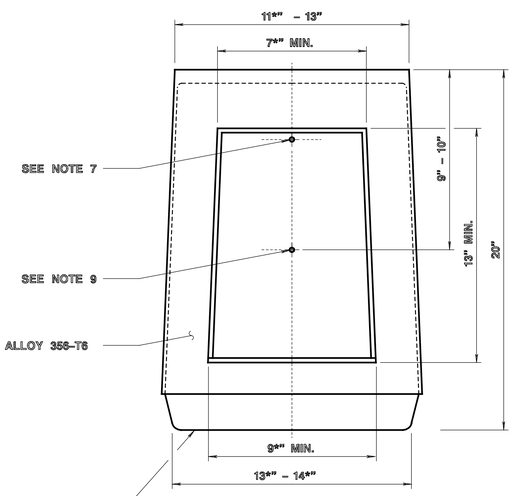

ELEVATION
ALTERNATE DESIGN
OF BASE

BOTTOM PAINTED WITH ONE COAT OF BITUMINOUS BASE PAINT

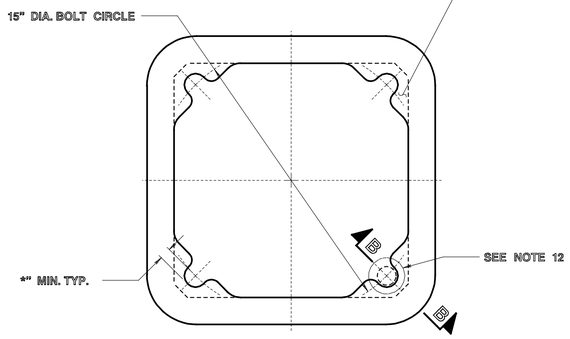

PLAN VIEW OF BASE

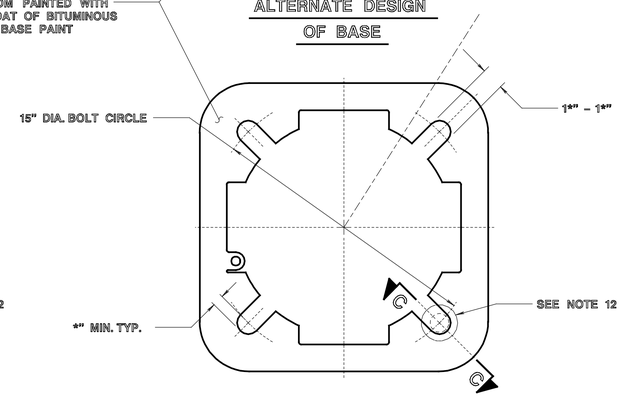

PLAN VIEW OF BASE

NOTES

1. DESIGN BASE TO MEET THE STRENGTH REQUIREMENTS NECESSARY TO SUPPORT THE MAXIMUM OVERTURNING MOMENT THAT A TYPE "C" STANDARD MEETING THE REQUIREMENTS OF DETAIL T–08 WILL SUPPORT.
2. OPENINGS HAVE A MINIMUM DIAMETER OF 6". THE GEOMETRY DETERMINED BY MANUFACTURER.
3. SLOT OF SUFFICIENT SIZE TO ACCEPT 1" DIA. BOLTS ON A 11" THRU 12" DIA. BOLT CIRCLE.
4. FURNISH DETAIL DRAWINGS OF TRANSFORMER BASE FOR APPROVAL.
5. FURNISH CERTIFIED MILL TEST REPORTS THAT ALLOYS AND TEMPER SHOWN MEET REQUIREMENTS AS INDICATED ON DRAWING.
6. DESIGN AND MANUFACTURE ACCORDING TO THE 2001 AASHTO STANDARD SPECIFICATIONS FOR STRUCTURAL SUPPORTS FOR HIGHWAY SIGNS, LUMINAIRES AND TRAFFIC SIGNALS. UTILIZE APPENDIX C OF THE SPECIFICATIONS FOR IDENTIFICATION OF LOADING CRITERIA. DESIGN WIND SPEED IS 80 MPH. DESIGN FOR FATIGUE IS WAVED.
7. PROVIDE PLASTIC DOOR TYPE – ABS PLASTIC MODIFIED FOR UV RESISTANCE. STEEL GRAY COLOR *" MINIMUM THICK. ATTACH DOOR TO BASE WITH AN APPROVED VANDAL RESISTANT LOCKING DEVICE USING A *" OR *" STN. STL. GRADE B8 SOCKET HD. CAP SCREW. AS AN ALTERNATE A FIBERGLASS DOOR WITH UV INHIBITORS MAY BE UTILIZED.
8. SUPPLY FLAT WASHERS FOR THE BASE AS PER MANUFACTURERS REQUIREMENTS.
9. DRILL AND TAP HOLE FOR *" – 20NC–2 STN. STL. GROUND STUD OPPOSITE DOOR (SEE DETAIL "A" OR ALTERNATE DETAIL "D")
10. THE MAXIMUM LENGTH OF THE SLOT WILL BE DESIGNED THAT WHEN A 11*" SQUARE SHOE BASE IS MOUNTED ON TOP OF THE TRANSFORMER BASE, THE SLOTS MUST COMPLETELY COVERED BY SHOE BASE.
11. THE MAXIMUM THICKNESS OF BASE ALLOWED MUST GUARANTEE 1*" MINIMUM INSERTION INTO PUMPROD COUPLING OF 3" LG. ANCHOR BOLT WITH LOCK WASHER AND FLAT WASHER INSTALLED ASSUMING *" SHIM.
12. DESIGN THE BASE THAT THERE IS A *" MINIMUM CLEARANCE FROM THE 2*" FLAT WASHER TO THE INNER SIDES OF THE BASE.
13. DESIGN THE BASE THAT THERE IS A *" MINIMUM CLEARANCE FROM THE 1" FLAT WASHER TO THE OUTER SIDES OF THE BASE.
14. THE MANUFACTURER SHALL SUPPLY ALL OTHER HARDWARE WHICH IT IS NECESSARY TO INSTALL.
15. THIS BASE IS ONLY TO BE UTILIZED FOR TRAFFIC SIGNAL INSTALLATIONS.
16. DIAGRAM IS A METHOD OF INSTALLATION.

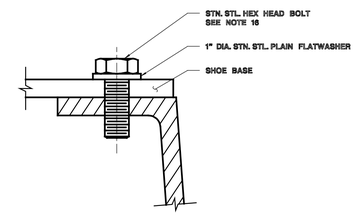

BOLTING DETAIL

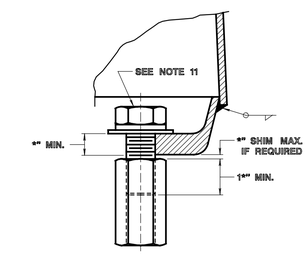

SECTION C–C

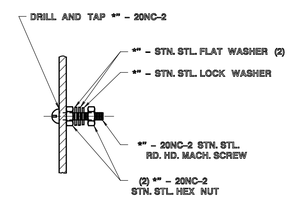

DETAIL "A"

GROUND STUD DETAIL
OPPOSITE DOOR OPENING

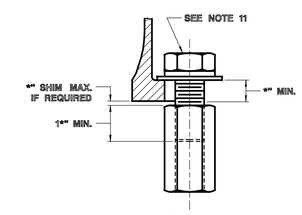

SECTION B–B

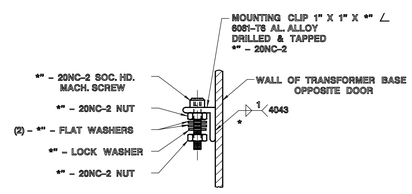

ALTERNATE DETAIL "D"

GROUND STUD DETAIL
OPPOSITE DOOR OPENING

NEW JERSEY DEPARTMENT OF TRANSPORTATION

ELECTRICAL DETAILS
N.T.S.

TRAFFIC SIGNAL ALUMINUM TRANSFORMER
BASE TB–20

T–0207

REFERENCE

BDC07D-03