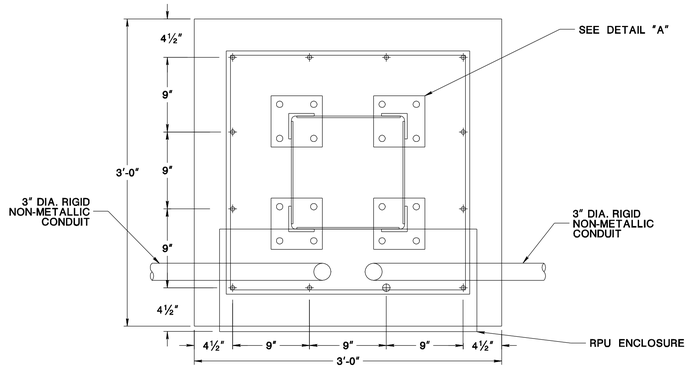

PLAN

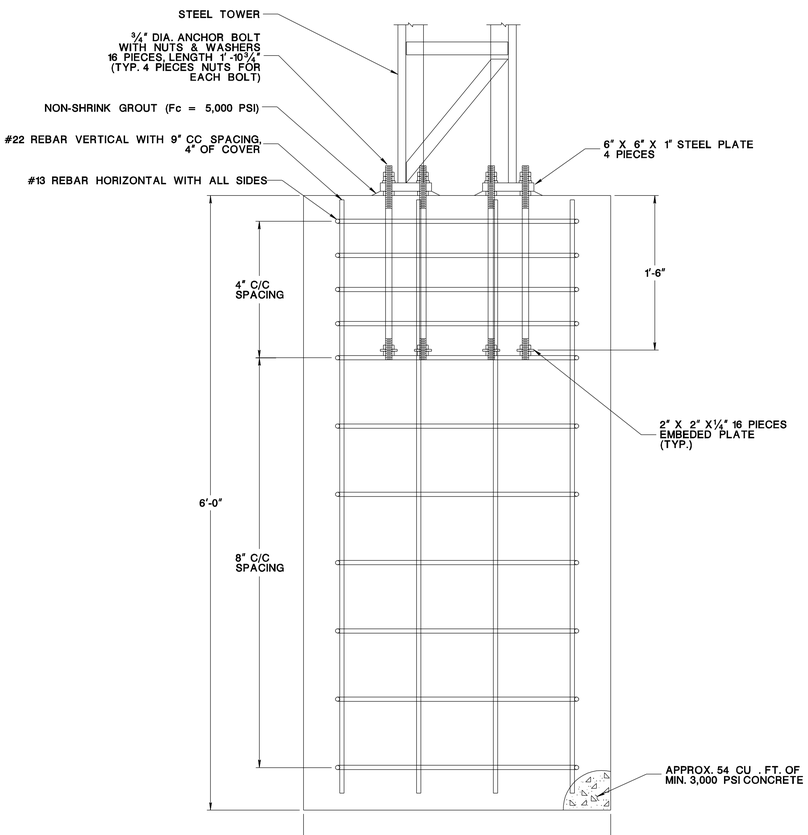

FOUNDATION

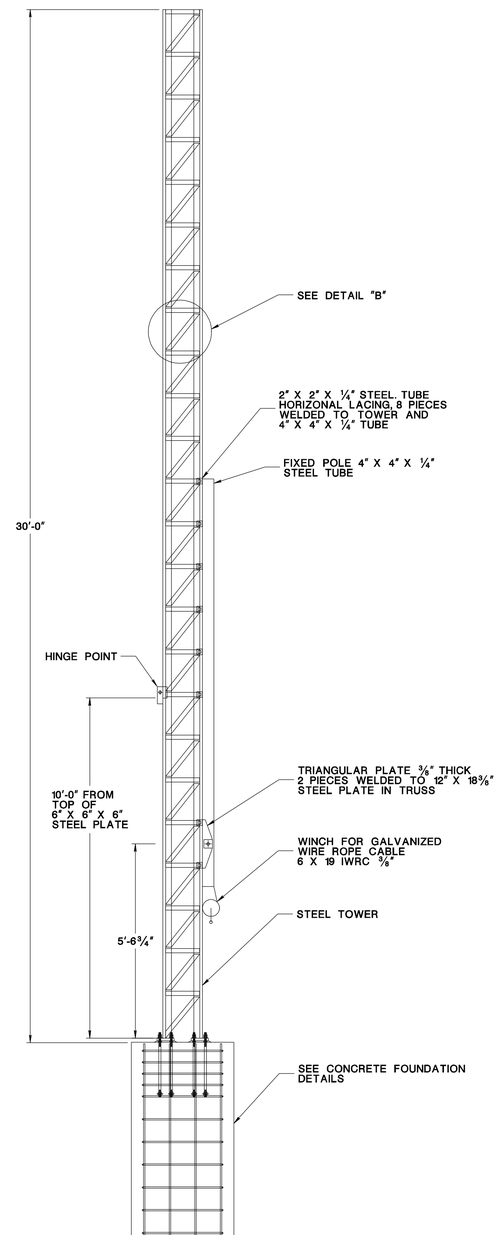

TOWER

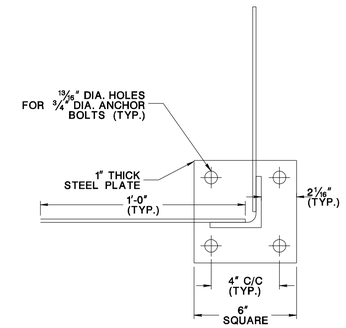

DETAIL "A"

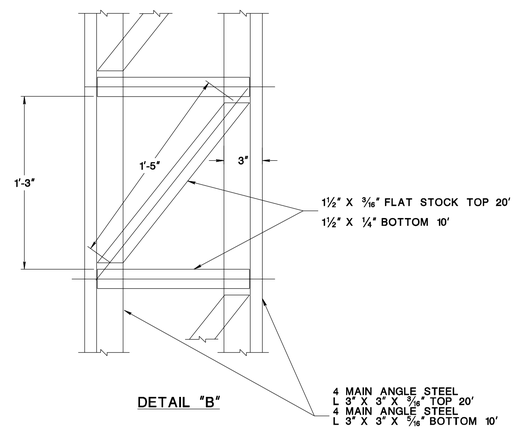

DETAIL "B"

NOTES

1. ALL STEEL PLATES PER ASTM A36.
2. ALL STEEL TUBES PER ASTM A36 OR EQUAL.
3. ALL STEEL FLATE BAR PER ASTM A36.
4. ALL STEEL ANGLES PER ASTM A36.
5. ALL ANCHOR BOLTS PER ASTM A307 & GALVANIZED PER ASTM A153.
6. ALL ANCHOR BOLT NUTS PER ASTM A563 GRADE 1H OR ASTM 194 GRADE 2H.
7. ALL WELD FILLER MATERIAL PER ER70S-3, AWS 5.18.
8. ALL BOLTS PER ASTM A325 & GALVANIZED PER ASTM A153.
9. FABRICATE STRUCTURE TO SUPPORT THE DESIGN CRITERIA OF 2009 AASHTO STANDARD SPECIFICATIONS FOR STRUCTURE SUPPORTS.
10. CONCRETE FOUNDATION PER ACI 301 & ACI 318 CONCRETE Fc = 3,000 PSI MIN.
11. REBAR Fy = 60,000 PSI MIN.
12. ALL WELDING PER AWS D1.1.
13. ENTIRE STRUCTURE TO BE GALVANIZED PER ASTM A153 AFTER FABRICATION.
14. ALL REBARS ARE DESIGNATED IN SOFT METRIC BAR SIZES.

NOT TO SCALE

ITS-704-33

NEW JERSEY DEPARTMENT OF TRANSPORTATION

ITS DETAILS

ROADWAY WEATHER INFORMATION SYSTEM, WEATHER STATION

SHEET 2 OF 2

NJDOT Design Services

BDC-11D-03 MISC. CHANGES
BDC-07D-03 - ORIGINAL SHEET

ID=TPOKSEBG date=29-SEP-2011 10:45 scale=30.000000:1.000000 pen table=\\Njdotprjws\v8system\NJDOTWS\Projects\NJDOTEng\plot\TBLs\Roadway\basic.tbl
file=