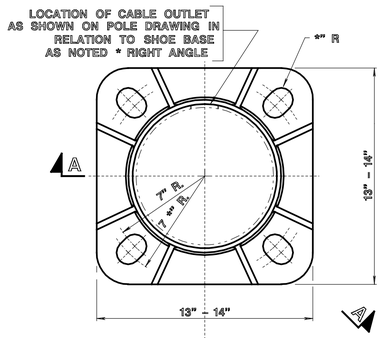

DETAIL 'A'

ALUMINUM SHOE BASE

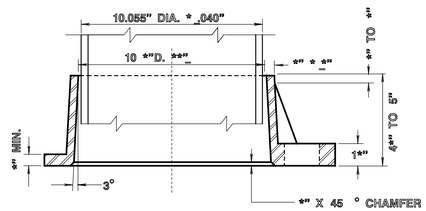

SECTION A–A

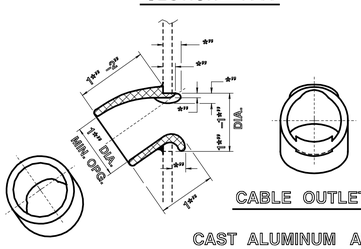

CABLE OUTLET

CAST ALUMINUM ALLOY

DETAIL 'B'

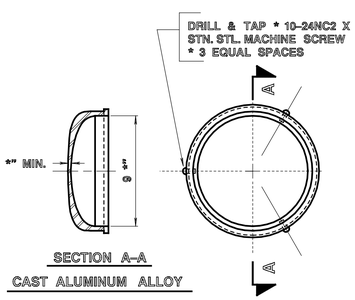

SECTION A–A

CAST ALUMINUM ALLOY

CAST ALUMINUM CAP

DETAIL 'C'

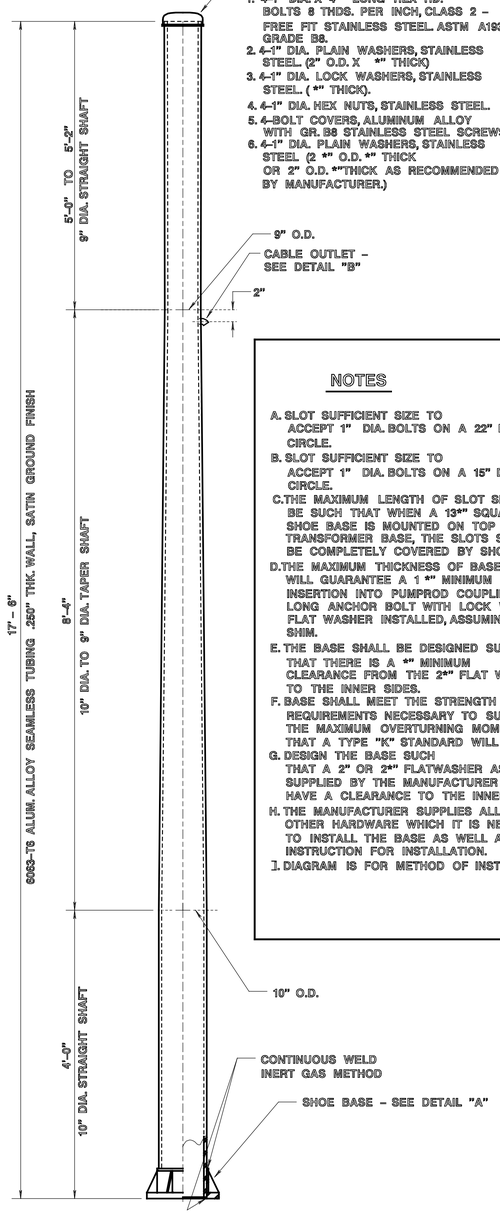

TRAFFIC SIGNAL STANDARD "K"

FURNISH WITH EACH POLE

1. 4–1" DIA. X 4*" LONG HEX HD. BOLTS 8 THDS. PER INCH, CLASS 2 – FREE FIT STAINLESS STEEL. ASTM A193 GRADE B8.
2. 4–1" DIA. PLAIN WASHERS, STAINLESS STEEL. (2" O.D. X *" THICK)
3. 4–1" DIA. LOCK WASHERS, STAINLESS STEEL. (*" THICK).
4. 4–1" DIA. HEX NUTS, STAINLESS STEEL.
5. 4–BOLT COVERS, ALUMINUM ALLOY WITH GR. B8 STAINLESS STEEL SCREWS.
6. 4–1" DIA. PLAIN WASHERS, STAINLESS STEEL. (2 *" O.D. *" THICK OR 2" O.D. *"THICK AS RECOMMENDED BY MANUFACTURER.)

NOTES

A. SLOT SUFFICIENT SIZE TO ACCEPT 1" DIA. BOLTS ON A 22" DIA. BOLT CIRCLE.
B. SLOT SUFFICIENT SIZE TO ACCEPT 1" DIA. BOLTS ON A 15" DIA. BOLT CIRCLE.
C. THE MAXIMUM LENGTH OF SLOT SHALL BE SUCH THAT WHEN A 13*" SQUARE SHOE BASE IS MOUNTED ON TOP OF THE TRANSFORMER BASE, THE SLOTS SHALL BE COMPLETELY COVERED BY SHOE BASE.
D. THE MAXIMUM THICKNESS OF BASE ALLOWED WILL GUARANTEE A 1 *" MINIMUM INSERTION INTO PUMPROD COUPLING OF 3" LONG ANCHOR BOLT WITH LOCK WASHER AND FLAT WASHER INSTALLED, ASSUMING *" SHIM.
E. THE BASE SHALL BE DESIGNED SUCH THAT THERE IS A *" MINIMUM CLEARANCE FROM THE 2*" FLAT WASHER TO THE INNER SIDES.
F. BASE SHALL MEET THE STRENGTH REQUIREMENTS NECESSARY TO SUPPORT THE MAXIMUM OVERTURNING MOMENT THAT A TYPE "K" STANDARD WILL SUPPORT.
G. DESIGN THE BASE SUCH THAT A 2" OR 2*" FLATWASHER AS SUPPLIED BY THE MANUFACTURER SHALL HAVE A CLEARANCE TO THE INNER SIDES.
H. THE MANUFACTURER SUPPLIES ALL OTHER HARDWARE WHICH IT IS NECCESSARY TO INSTALL THE BASE AS WELL AS INSTRUCTION FOR INSTALLATION.
I. DIAGRAM IS FOR METHOD OF INSTALLATION.

NOTE:

DESIGN AND MANUFACTURE ACCORDING TO THE 2001 AASHTO STANDARD SPECIFICATIONS FOR STRUCTURAL SUPPORTS FOR HIGHWAY SIGNS, LUMINAIRES AND TRAFFIC SIGNALS. UTILIZE APPENDIX C OF THE SPECIFICATIONS FOR IDENTIFICATION OF LOADING CRITERIA. DESIGN WIND SPEED IS 80 MPH. DESIGN FOR FATIGUE IS WAVED.

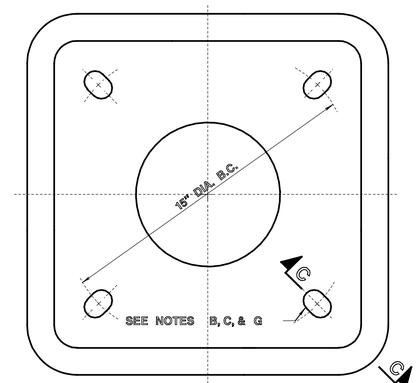

TOP VIEW

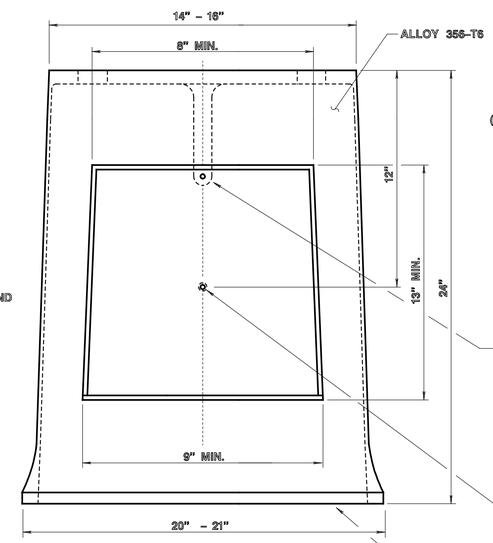

ELEVATION

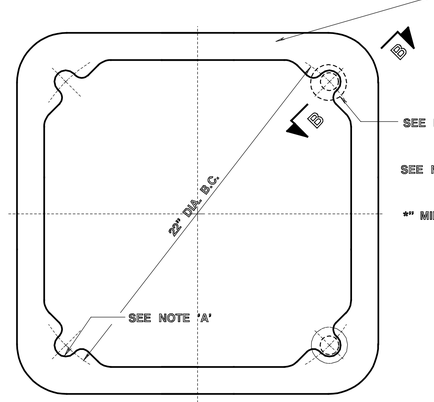

BOTTOM VIEW

TRANSFORMER BASE – 'K'

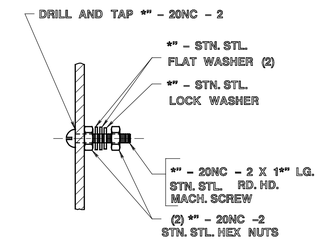

DETAIL "D"

GROUND STUD DETAIL

OPPOSITE DOOR OPENING

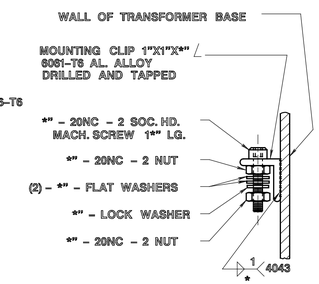

DETAIL "E"

ALTERNATE GROUND STUD DETAIL

OPPOSITE DOOR OPENING

PROVIDE PLASTIC DOOR TYPE – ABS MODIFIED FOR UV RESISTANCE. STEEL GRAY COLOR,*" THICK MIN. ATTACH DOOR TO BASE WITH AN APPROVED, VANDAL RESISTANT LOCKING DEVICE, USING STAINLESS STEEL HARDWARE.

DRILL AND TAP HOLE FOR *" X 1*" – 20 NC – 2 STAINLESS STEEL GROUND STUD OPPOSITE DOOR. (SEE DETAIL D OR ALTERNATE DETAIL E)

BOTTOM PAINTED WITH ONE COAT BITUMINOUS BASE PAINT.

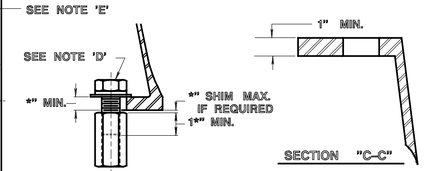

SECTION B–B

SECTION "C–C"

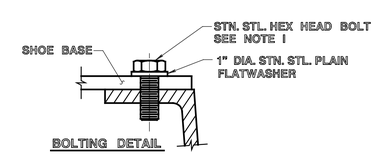

BOLTING DETAIL

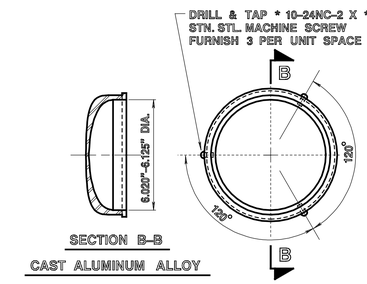

SECTION B–B

CAST ALUMINUM ALLOY

CAST ALUMINUM CAP

DETAIL "B"

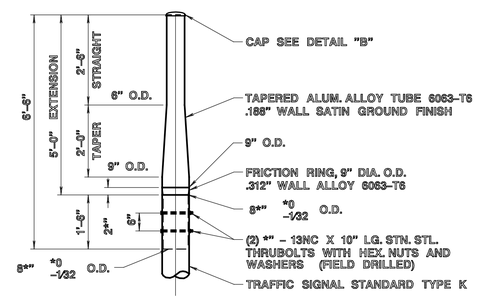

TRAFFIC SIGNAL EXTENSION "KE"

NOTE:

1. FURNISH WITH EACH STANDARD:
   (1) FRICTION RING, 9" DIA. O.D. .312" WALL ALLOY 6063–T6
   (1) CAP
   (2) *" – 13NC X 10" LG. STN. STL. THROUBOLTS WITH STN. STL. HEX NUTS AND STN. STL WASHERS
2. FURNISHED CERTIFICATIONS THAT ALUMINUM ALLOY AND TEMPER SHOWN MEET REQUIREMENTS AS SET FORTH BELOW OR AS OTHERWISE INDICATED ON DRAWING.
3. DO NOT INSTALL STANDARD WITHOUT ARM.

NEW JERSEY DEPARTMENT OF TRANSPORTATION

ELECTRICAL DETAILS

N.T.S.

TRAFFIC SIGNAL STANDARD "K"

TRANSFORMER BASE

& TRAFFIC SIGNAL EXTENSION "KE"

T–1007

REFERENCE

BDC07D-03