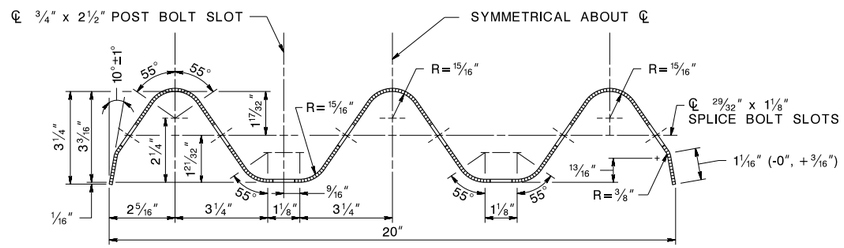

RAIL ELEMENT TO BE SUPPLIED IN LENGTHS OF 13′-6½″ OR 26′-0½″

THRIE BEAM RAIL ELEMENT AND BACK-UP PLATE

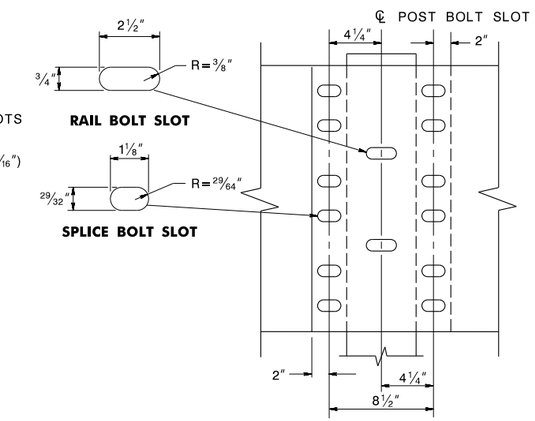

THRIE BEAM RAIL SPLICE

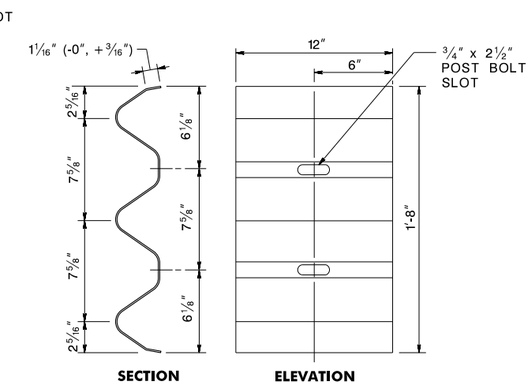

BACK-UP PLATE AT NON-SPLICE POSTS

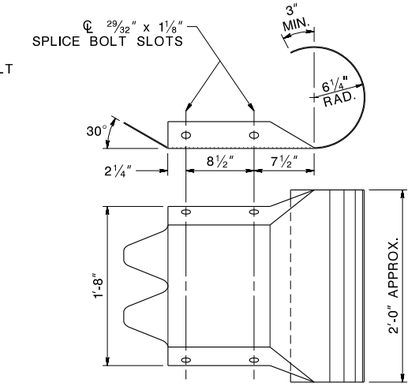

THRIE BEAM END SECTION (ROUNDED)

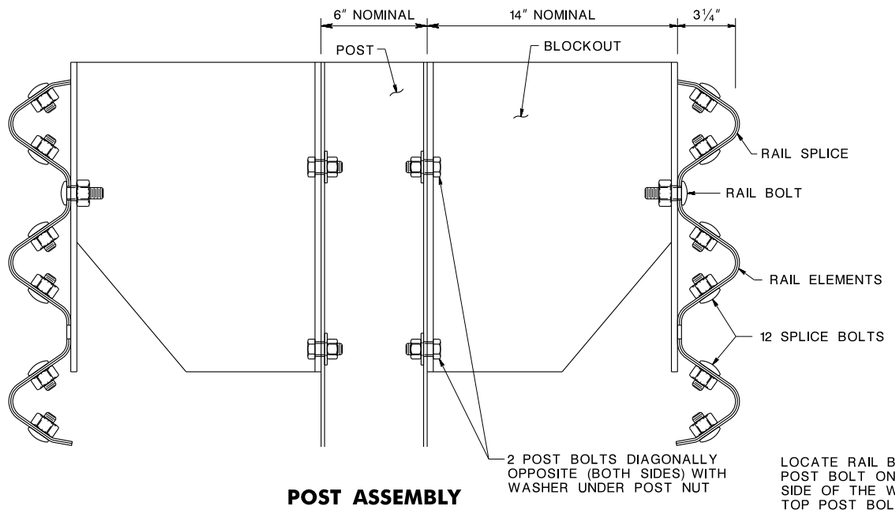

POST ASSEMBLY

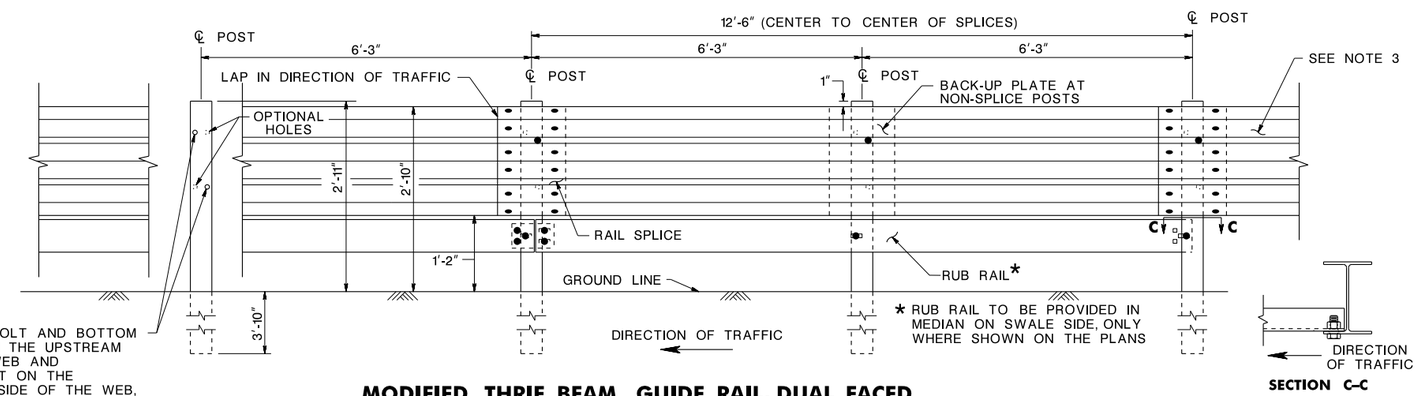

MODIFIED THRIE BEAM GUIDE RAIL, DUAL FACED

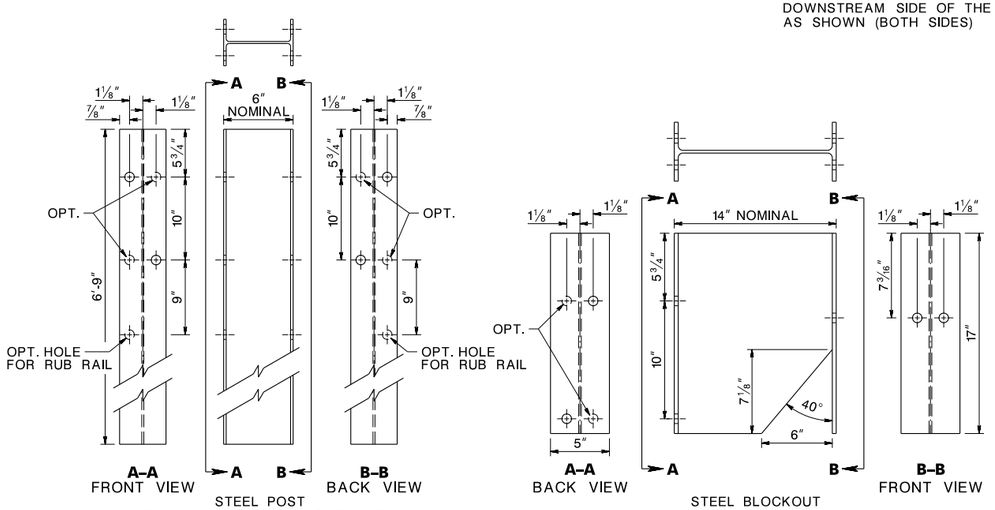

ALL HOLES 13/16″ DIA.

MODIFIED THRIE BEAM POST AND BLOCKOUT

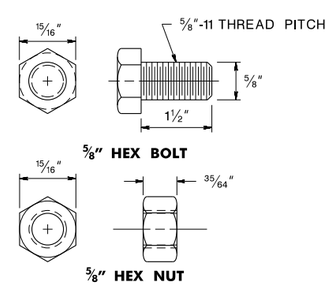

POST NUT & BOLT

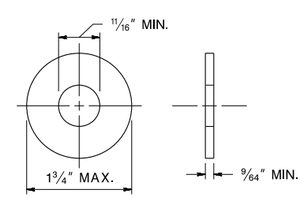

STEEL WASHER

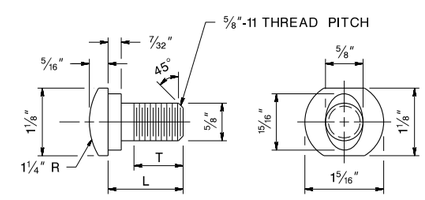

5/8″ BUTTON HEAD BOLT

TYPE	L	T (MIN.)
SPLICE	1¼″	FULL LENGTH THREAD
RAIL	2″	FULL LENGTH THREAD

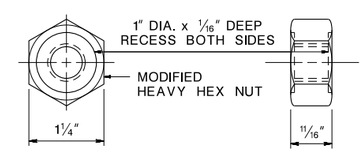

5/8″ RECESSED NUT

SPLICE & RAIL NUT & BOLT

NOTES:

1. ALL DIMENSIONS ARE SUBJECT TO MANUFACTURING TOLERANCES.
2. RAIL ELEMENTS TO BE FURNISHED SHOPCURVED, CONCAVE OR CONVEX, FOR RADII BETWEEN 20 FEET AND 150 FEET.
3. SEE CD-609-7A FOR TRANSITION TO BEAM GUIDE RAIL, DUAL FACED, AND AN END TERMINAL. USE A THRIE BEAM END SECTION (ROUNDED) ON THE END OF THE RAIL ELEMENT WHERE MODIFIED THRIE BEAM GUIDE RAIL, DUAL FACED, ENDS AND MODIFIED THRIE BEAM GUIDE RAIL, SINGLE FACED, BEGINS.

MODIFIED THRIE BEAM GUIDE RAIL, DUAL FACED (MASH TL–3)

N.T.S.

CD-609-19

NEW JERSEY DEPARTMENT OF TRANSPORTATION

CONSTRUCTION DETAILS

CD-609-19.1

BDC23D-01-REVISED CD-609-18 THRU 20
BDC17D-10-RUB RAIL ADDED
BDC17D-02-REVISIONS TO CD-609-19
BDC09D-01-ORIGINAL SHEET

pen table= H:\COMMON\CADD\Support\JPlot\pentables\NJDOTRdDetails_full.tbl
scale=1:31.5367
date=19-NOV-2023 16:50
ID= rdonahey
file=