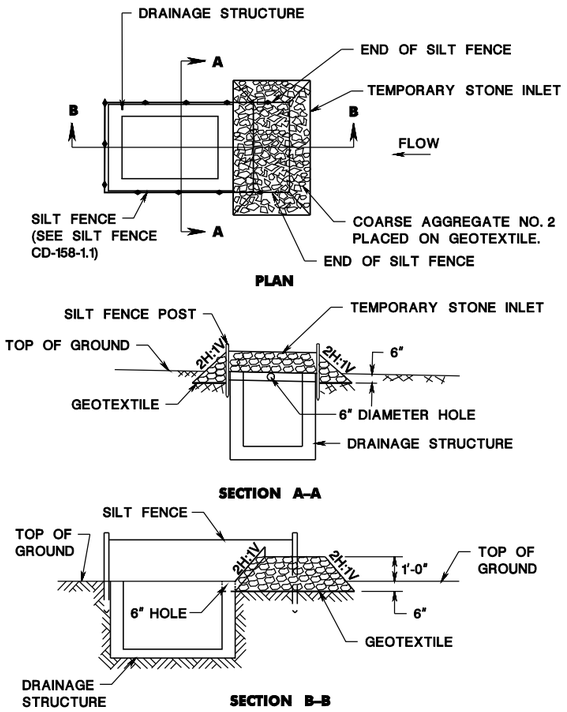

NOTE:
REFER TO CD-158-2.4 SECTION A-A FOR TREATMENT OF 6" HOLE.

INLET SEDIMENT TRAP

CD-158-3.1

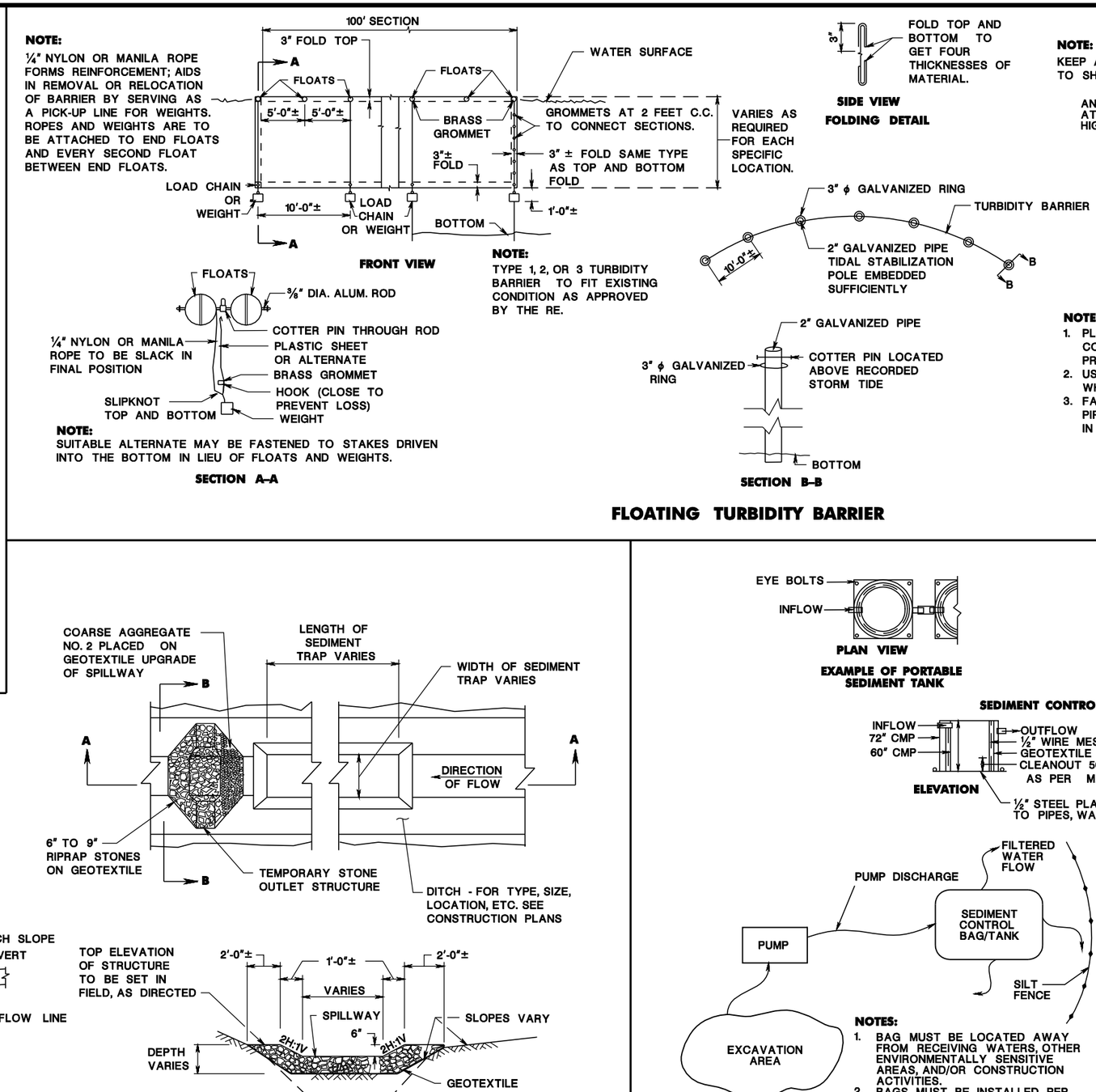

NOTE:
1/4" NYLON OR MANILA ROPE FORMS REINFORCEMENT; AIDS IN REMOVAL OR RELOCATION OF BARRIER BY SERVING AS A PICK-UP LINE FOR WEIGHTS. ROPES AND WEIGHTS ARE TO BE ATTACHED TO END FLOATS AND EVERY SECOND FLOAT BETWEEN END FLOATS.

NOTE:
TYPE 1, 2, OR 3 TURBIDITY BARRIER TO FIT EXISTING CONDITION AS APPROVED BY THE RE.

NOTE:
SUITABLE ALTERNATE MAY BE FASTENED TO STAKES DRIVEN INTO THE BOTTOM IN LIEU OF FLOATS AND WEIGHTS.

NOTE:
KEEP AS CLOSE TO SHORE, AS POSSIBLE

NOTES:
1. PLACE TURBIDITY BARRIER AS TO EFFECTIVELY CONTROL SILT DISPERSION UNDER THE CONDITIONS PRESENT ON A PARTICULAR PROJECT.
2. USE APPROPRIATE NAVIGATIONAL WARNING LIGHTS WHEN USED NEXT TO NAVIGATIONAL CHANNEL.
3. FASTEN TURBIDITY BARRIER TO EMBEDDED GALVANIZED PIPE IN TIDAL OR FLOWING CONDITIONS TO KEEP BARRIER IN PLACE.

FLOATING TURBIDITY BARRIER

CD-158-3.2

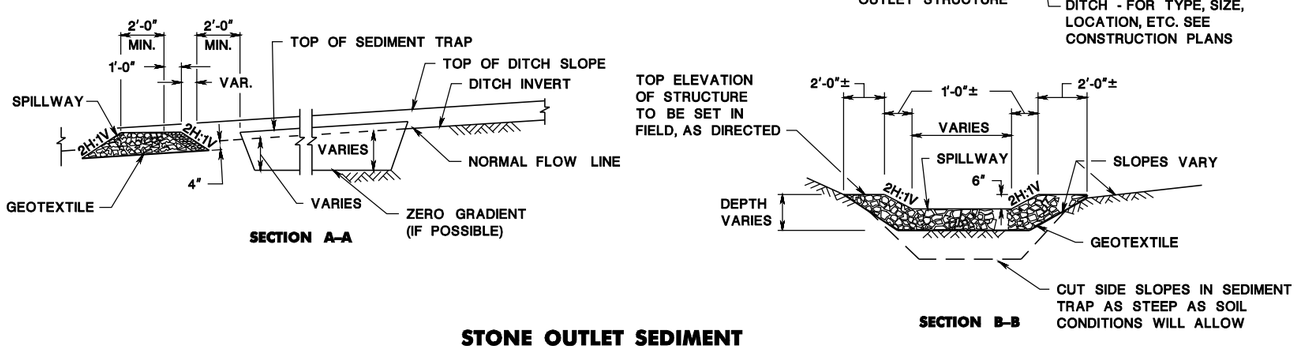

STONE OUTLET SEDIMENT TRAPS, __' x __'

CD-158-3.3

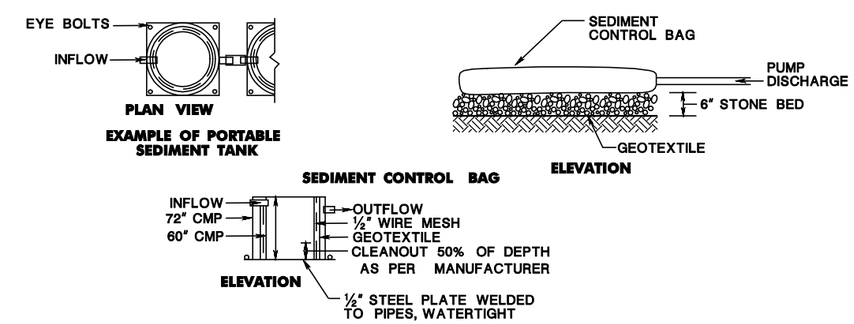

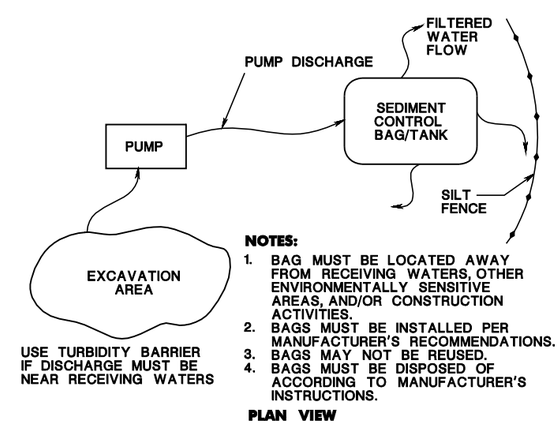

NOTES:
1. BAG MUST BE LOCATED AWAY FROM RECEIVING WATERS, OTHER ENVIRONMENTALLY SENSITIVE AREAS, AND/OR CONSTRUCTION ACTIVITIES.
2. BAGS MUST BE INSTALLED PER MANUFACTURER'S RECOMMENDATIONS.
3. BAGS MAY NOT BE REUSED.
4. BAGS MUST BE DISPOSED OF ACCORDING TO MANUFACTURER'S INSTRUCTIONS.

SEDIMENT CONTROL TANK OR BAG

CD-158-3.4

SOIL EROSION AND SEDIMENT CONTROL MEASURES

N.T.S.

CD-158-3

NEW JERSEY DEPARTMENT OF TRANSPORTATION

CONSTRUCTION DETAILS

ID=TP2VILL date=28-SEP-2016 11:05 scale=63.0733061:1.000000 pen table=\\NJDOTPRJWS\Vsystem\NJDOTWS\Projects\NJDOTEsg\plot\TSLs\Roadway\Details_11x17.tbl
BDC16D-01-ORIGINAL SHEET
file=