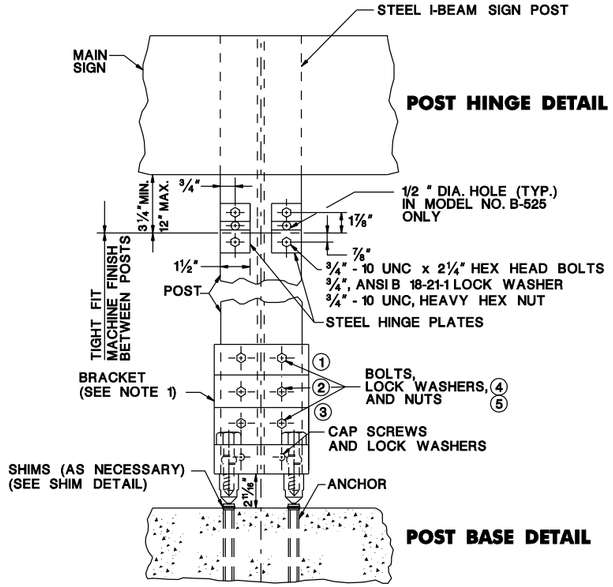

FRONT VIEW
BREAKAWAY ASSEMBLIES

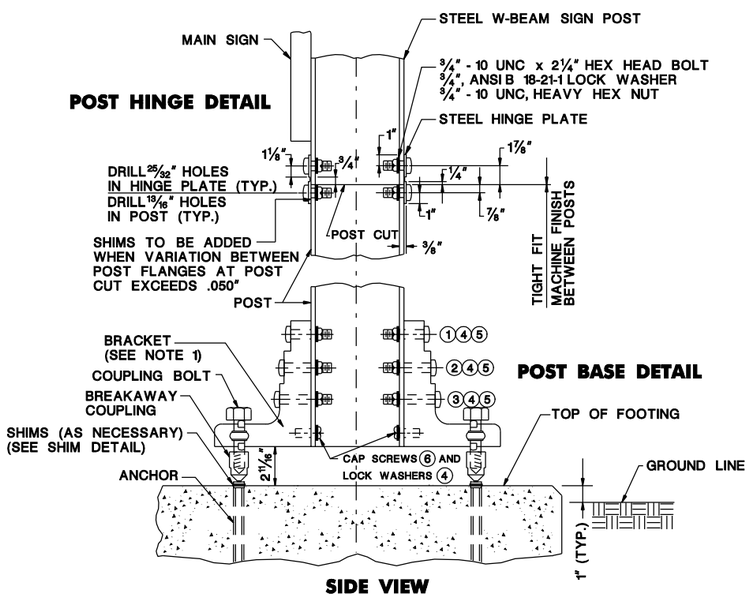

SIDE VIEW
BREAKAWAY ASSEMBLIES

BOLTS, LOCK WASHERS, NUTS, & CAP SCREWS

MODEL 525

1. 1/2" - 13 UNC x 2 1/2" HEX HEAD BOLT, GALVANIZED
2. 1/2" - 13 UNC x 2 3/4" HEX HEAD BOLT, GALVANIZED
3. 1/2" - 13 UNC x 3" HEX HEAD BOLT, GALVANIZED
4. 1/2", ANSI B 18-21-1 LOCK WASHER, GALVANIZED
5. 1/2" - 13 UNC, HEAVY HEX NUT, GALVANIZED
6. 1/2" - 13 UNC x 1 1/4" HEX HEAD CAP SCREW, GALVANIZED

MODEL 650

1. 5/8" - 11 UNC x 2 3/4" HEX HEAD BOLT, GALVANIZED
2. 5/8" - 11 UNC x 3" HEX HEAD BOLT, GALVANIZED
3. 5/8" - 11 UNC x 3 1/4" HEX HEAD BOLT, GALVANIZED
4. 5/8", ANSI B 18-21-1 LOCK WASHER, GALVANIZED
5. 5/8" - 11 UNC, HEAVY HEX NUT, GALVANIZED
6. 5/8" - 11 UNC x 1 1/4" HEX HEAD CAP SCREW, GALVANIZED

SPECIAL BOLT, ANCHOR AND COUPLING DETAIL

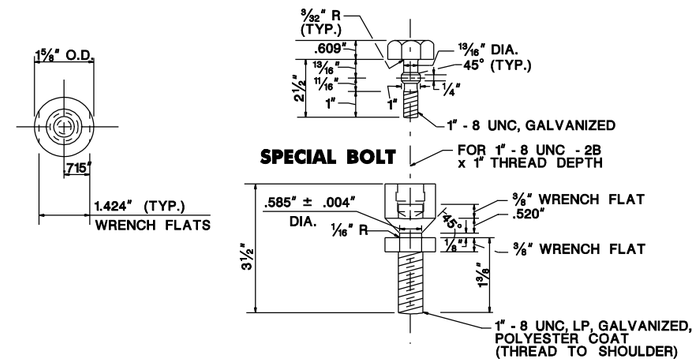

COUPLING

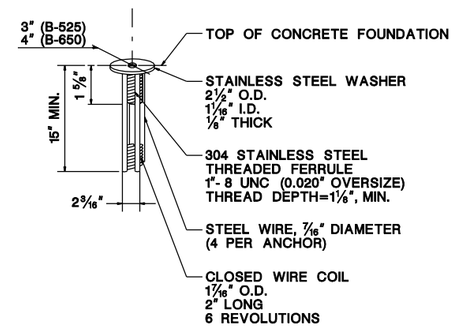

ANCHOR

NOTES:

1. STAMP THE BRACKET NUMBER ON THE BRACKET.
2. BOLT THE BRACKETS TO POST. THEN PLACE POST AND CONNECTED BRACKET TO BREAKAWAY COUPLING.
3. ALL BOLTS TO BE TIGHTENED IN ACCORDANCE WITH THE MANUFACTURER'S SPECIFICATIONS.
4. DESIGNATION B-525 IS FOR 6" AND 8" BEAM SIZES.
5. DESIGNATION B-650 IS FOR 10", 12", 14", 16", 18", AND 21" BEAM SIZES.
6. DO NOT PLACE TORQUE WRENCH ACROSS NECK OF COUPLING.
7. THE TOLERANCE OF DIMENSION "E" IS +/- 0.004".

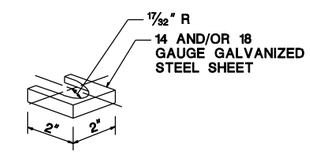

SHIM DETAIL

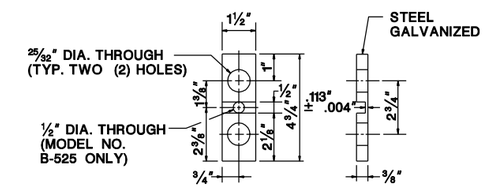

STEEL HINGE PLATE DETAIL

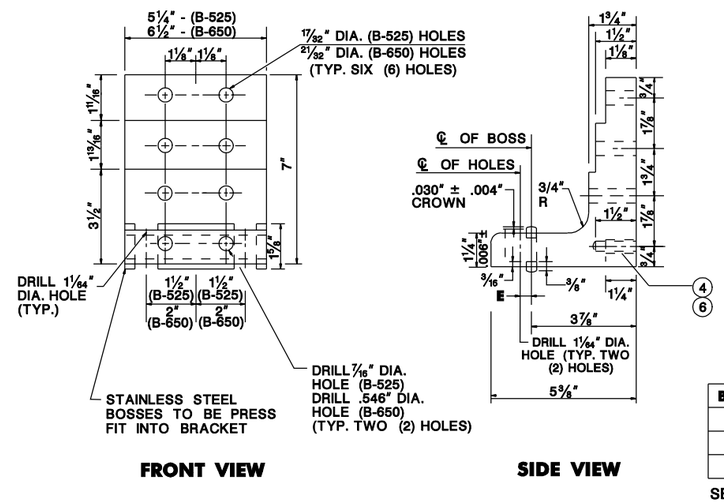

BRACKET No.	E (IN.)
1	0.100
2	0.150
3	0.200

SEE NOTE 7.

BRACKET DETAIL

CD-612-8.1

BREAKAWAY SIGN SUPPORTS FOR GROUND MOUNTED SIGNS

N.T.S.

CD-612-8

NEW JERSEY DEPARTMENT OF TRANSPORTATION

CONSTRUCTION DETAILS

ID=TP2VILL date=28-SEP-2016 11:10 scale=63.073306:1.000000 pen table=\\NJDOTPRJWS\Projects\NJDOTWS\Projects\NJDOTWS\Projects\NJDOTEng\pilot\TBLs\Roadway\Details_11x17.tbl
BDC16D-01-ORIGINAL SHEET
file=